30HZ 043-280

Reciprocating Liquid Chillers

Nominal cooling capacity 126-783 kW

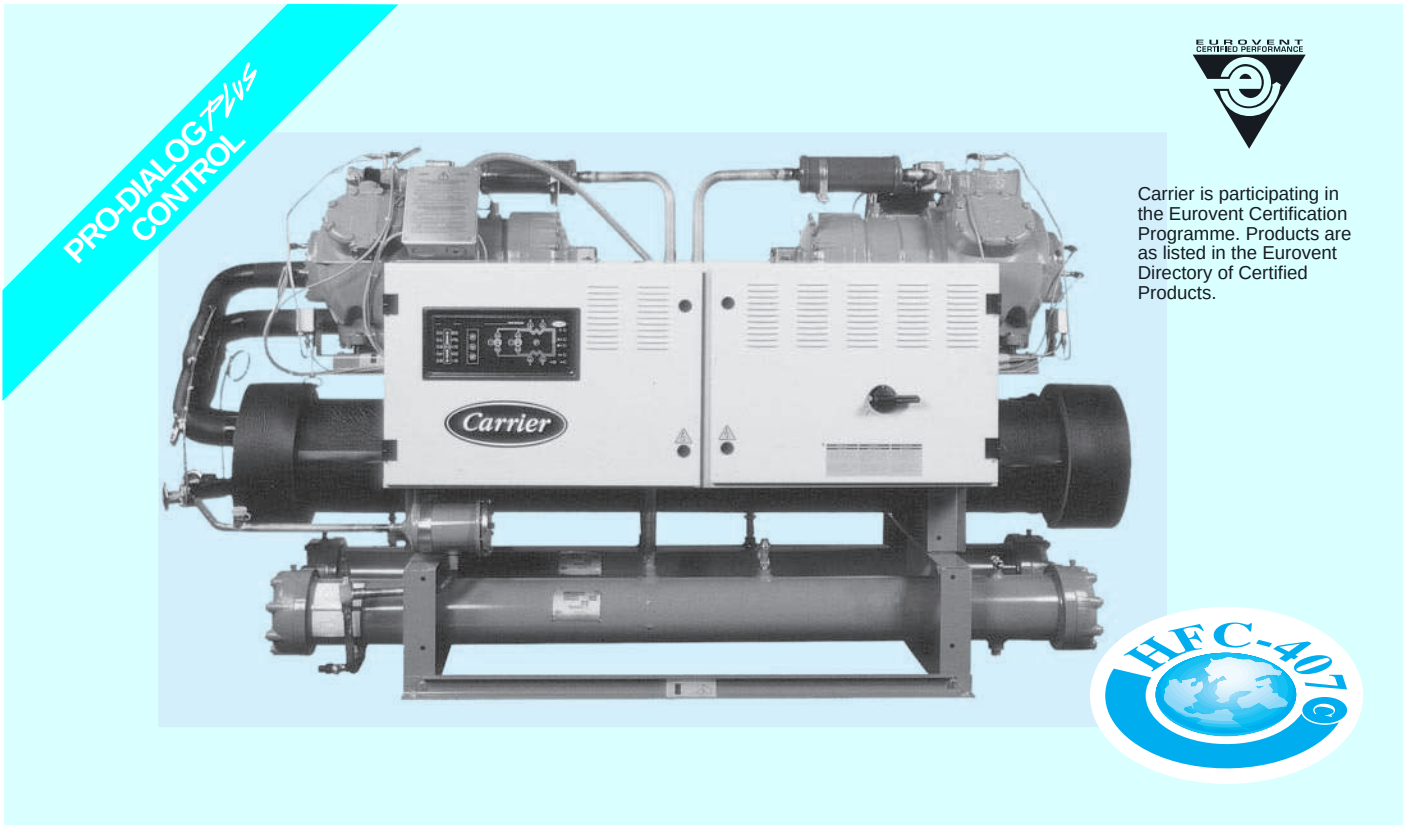

The 30HZ series of liquid chillers is designed for operation with refrigerant HFC-407C to meet new environmental protection requirements. They are available as a water-cooled packaged or condenserless version, and offer an ideal solution for chilled water production.

Features

- The new, ecological refrigerant HFC-407C has an ozone depletion potential of zero and is not affected by international regulations on the usage of CFCs and their derivatives. This new refrigerant ensures similar performances to HCFC-22 and offers an economical solution to environmental protection problems.
- HFC-407C is a blend of HFC-32, 125 and 134a. As it is produced and distributed world-wide, there are no availability problems. These new HFC-407C chillers have been designed using specific refrigeration components and new production methods and are backed by thousands of hours of laboratory and field tests. This allows Carrier to offer tomorrow?s chiller technology today.
- Excellent part-load energy efficiency through use of multiple compressors and electronic expansion valves. As the chiller rarely operates at full load, significant savings are ensured. This reduced power consumption also contributes to limiting the greenhouse effect, resulting from the generation of thermal energy.
- Two independent refrigerant circuits, the second one takes over automatically when the first one malfunctions, maintaining partial cooling under all circumstances.
- Reduced, compact dimensions: unit can pass through standard 1 m doorways (30HZ 043-225). Space requirements inside the building are also significantly reduced.
- Refrigerant containment - rigorous factory tightness tests and use of temperature or pressure sensors without capillary tubes eliminate the risk of leaks. Compressor suction and discharge shut-off valves permit isolation of the refrigerant charge in the heat exchangers. Maintenance operations become less frequent and more effective.

PRO-DIALOG Plus control

PRO-DIALOG Plus is an advanced numeric control system that combines complex intelligence with great operating simplicity.

PRO-DIALOG Plus ensures intelligent leaving water temperature control and optimises energy requirements

- The PID control algorithm with return water temperature compensation anticipates load variations, guarantees leaving water temperature stability and prevents unnecessary compressor cycling.
- The long-stroke electronic expansion valves (EXV) and PID superheat control (standard on 30HZ 091-280) allow a significant energy efficiency improvement at part load conditions, and faultless chiller operation in a wider temperature range.
- Several capacity loading possibilities ensure improved start-up at low outdoor air temperature, and permit use of one of the refrigerant circuits as a back-up circuit.
- Adjustable ramp loading, according to the inertia of the application, avoids load increases that are too fast and too frequent, increasing unit life and limiting power consumption peaks.

PRO-DIALOG Plus ensures preventive protection and enhances chiller reliability

- Equalisation of compressor operating hours
- No capillary tubes or pressostats (except as safety device)
- PRO-DIALOG Plus monitors all chiller safety parameters including insufficient evaporator water flow. The fault history function and the 80 fault codes facilitate immediate fault location (see Technical Description)

PRO-DIALOG Plus offers extended communications capabilities

- Clear and easy-to-understand operator interface. The LEDs, numeric displays and touch keys are well-positioned on the schematic chiller diagram. The user immediately knows all operating parameters: pressures, temperatures, operating hours, etc.
- The extensive chiller remote control capabilities (wired connection) allow integration into building monitoring systems (see Technical Description)
- RS485 series port for connection to the Carrier Comfort Network (CCN) or any other monitoring system (optional communications interface with open protocol allows transfer of almost 50 parameters).
- Parallel piloting of two units as standard, or of several units with Flotronic System Manager (FSM) and Chiller System Manager (CSM III) options.

Electronic expansion valve EXV

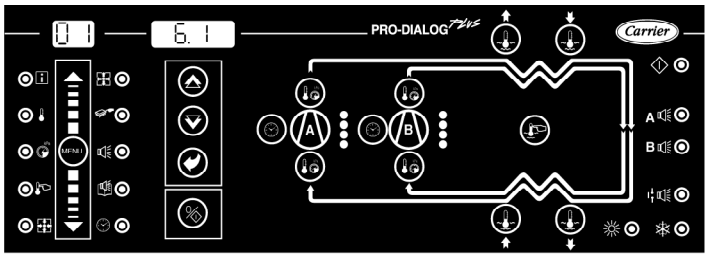

Operator interface

Options and accessories

	Option	Accessory
Condenserless version: 30HZV	X	
Heat pump version: 30HZP(except ISPESL code).	X	
High condensing pressure version: 30HZW for heat reclaim or application with glycol cooler (condenser entering temperatures 40°C or higher) (except ISPESL code).	X	
Low leaving brine temperatures from 5°C to -6°C	X	
Very low leaving brine temperatures from -6°C to -15°C (except ISPESL code)	X	
Electrical box protection to IP54	X	
High and low pressure manometers	X	
Electronic compressor oil pressure protection and display	X	
Copper/Nickel condensers	X	
Heat reclaim condensers with separate cooling water and heat reclaim circuits	X	
220-3-50 power supply (up to size 121)	X	
Main power disconnect switch with auxiliary circuit power supply transformer	X	
Evaporator with fewer or more baffles	X	
Condenser with 3-pass water box	X	X
Electronic expansion valves (30HZ 052-065)	X	
Compressor sound enclosure		X
Air-cooled condenser electronic control kit		X
Digital display of condenser entering/leaving water temperatures		X
Compressor part-winding start (30HZ 091-280)	X	X
RS485 communications interface with open protocol	X	X
Additional capacity step (30HZ 043-065 only)	X	

Physical data

30HZ		043	052	065	091	101	111	121	141	161	195	225	250	280
Net nominal cooling capacity	kW													
Standard chiller 30HZ*		134	153	199	230	270	300	316	371	415	533	626	719	783
30HZV condenserless units**		126	144	194	216	260	278	297	352	388	500	588	677	735
Operating weight	kg													
30HZ standard, 30HZP, 30HZW		1075	1165	1232	2020	2350	2440	2490	2710	2810	3480	3780	4440	4870
30HZV - condenserless version		863	951	996	1650	1940	1980	2020	2240	2280	2950	3240	3750	4075
Total refrigerant charge R-407C* **	kg													
Circuit A		15.7	17.5	21.0	38.2	29.5	34.5	33.5	38.0	42.0	54.0	54.0	62.5	62.5
Circuit B		15.7	17.5	21.0	19.5	29.5	29.5	33.5	38.0	42.0	46.5	54.0	60.5	62.5
Compressors		06E semi-hermetic, 4 or 6 cylinders, 24.2 r/s												
Quantity - Circuit A		1	1	1	2	2	2	2	2	2	3	3	4	4
Quantity - Circuit B		1	1	1	1	2	2	2	2	2	2	3	3	4
Capacity control		PRO-DIALOG Plus control												
No. of control steps		4	4	4	6	11	11	11	11	11	5	6	7	8
Minimum step capacity	%	40	33	33	22	20	18	16	19	16	20	16	14	12
Evaporator		One, direct expansion, multi-tube shell												
Net water volume	l	55	63	63	92	154	154	154	199	199	242	242	276	276
No. of refrigerant circuits		2	2	2	2	2	2	2	2	2	2	2	2	2
Water connections	in													
Inlet/outlet		3 gas threaded			PN16DN100	PN16DN125								
		NFE 03005			NFE 29203	NFE 29203								
Drain														
Max. water side operating pressure	kPa	1000	1000	1000	1000	1000	1000	1000	1000	1000	1000	1000	1000	1000
Condenser		Shell and multi-tube												
Quantity		2	2	2	2	2	2	2	2	2	2	2	2	2
Net water volume	l													
Circuit A		10	10	12	25	18	25	25	25	30	37	37	51	51
Circuit B		10	10	12	12	18	18	25	25	30	30	37	37	51
Water connections	in													
Inlet/outlet		Gas threaded			Flat flange, brazed									
Circuit A		1-1/2	1-1/2	2	2-1/2	2	2-1/2	2-1/2	2-1/2	2-1/2	2-1/2	2-1/2	3	3
Circuit B		1-1/2	1-1/2	2	2	2	2	2-1/2	2-1/2	2-1/2	2-1/2	2-1/2	2-1/2	3
Water box air vent	in	3/8 NPT												
Water box water drain	in	3/8 NPT												
Max. water side operating pressure	kPa	1000	1000	1000	1000	1000	1000	1000	1000	1000	1000	1000	1000	1000

Notes:

* Net nominal cooling capacity = gross cooling capacity minus the water pump heat against the internal evaporator pressure drop
Nominal Eurovent conditions: evaporator entering/leaving water temperature 12°C and 7°C. Condenser entering/leaving water temperature 30°C and 35°C.

** Standardised conditions: evaporator entering/leaving water temperature 12°C and 7°C. Condensing temperature dew point 50°C. Fluid temperature = condensing temperature at dew point - refrigerant glide - 5 K subcooling.

*** The 30HZV units have a nitrogen holding charge only.

Electrical data

30HZ		043	052	065	091	101	111	121	141	161	195	225	250	280
Power wiring														
Nominal power supply*	V-ph-Hz	400-3-50												
System voltage range	V	360-440												
Auxiliary circuit	V-ph-Hz	230-1-50												
Heater power input	kW	0.36	0.36	0.36	0.5	0.7	0.7	0.7	0.7	0.7	0.9	1.1	1.3	1.4
Maximum unit power input**	kW													
Standard units 30HZ		42	54	70	75	84	95	102	122	150	180	217	253	286
30HZV, 30HZW and 30HZP units		45	58	76	81	92	103	111	133	158	197	237	272	309
Maximum starting current	A													
Standard 30HZ		163	178	247	311	259	340	355	394	495	559	623	687	750
Standard 30HZ with part-winding option		Std	Std	Std	222	202	251	266	305	373	437	501	565	628
30HZV, 30HZW and 30HZP units		186	202	280	354	308	388	404	449	563	636	709	782	855
30HZV, 30HZW and 30HZP units with part-winding option		Std	Std	Std	252	239	287	303	348	425	498	571	644	717
Nominal operating current	A													
Standard units 30HZ*		62	78	110	111	124	138	148	179	209	260	314	372	418
Units without condenser 30HZV**		60	75	101	108	119	134	146	173	209	256	307	360	406
Maximum operating current	A													
Standard units 30HZ*		70	90	116	124	139	158	169	202	249	299	360	420	475
Units without condenser 30HZV		75	96	126	134	153	171	184	221	262	327	393	451	513

Notes:

* 30HZ 250-280 units have two power points. For separate power supply, please refer to the table below.

** At unit operating limit values. All currents are given at nominal voltage.

30HZ	Unit max. power input kW						Max. operating current A						Max. starting current A			
	30HZ std		30HZW/HZP		30HZW		30HZ std		30HZW/HZP		30HZW		30HZ std		30HZW/HZP	
	Circ. A	Circ. B	Circ. A	Circ. B	Circ. A	Circ. B	Circ. A	Circ. B	Circ. A	Circ. B	Circ. A	Circ. B	Circ. A	Circ. B	Circ. A	Circ. B
250	143	110	154	118	180	135	237	183	256	196	299	224	496	432	564	491
280	143	143	154	154	180	180	237	237	256	256	299	299	496	496	564	564

Condenser water flow rates

30HZ	No. of passes	Min. flow rate, l/s*		Max. flow rate, l/s**
		Closed loop	Open loop	
043	2	1.2	3.6	14.4
052	2	1.2	3.6	14.4
065	2	1.4	4.2	16.8
091	2	2.5	7.4	29.7
101	2	2.5	7.6	30.6
111	2	3.0	9.1	36.5
121	2	3.6	10.6	42.5
141	2	3.6	10.6	42.5
161	2	3.6	10.6	42.5
195	2	4.0	12.0	48.0
225	2	4.5	13.4	53.6
250	2	5.0	15.2	60.6
280	2	5.6	16.9	67.5

* Based on a water velocity of 0.3 m/s in a closed loop, and 0.9 m/s in an open loop.
** Based on a water velocity of 3.6 m/s.

Minimum cooler flow rates

30HZ	Min. water flow rate, l/s
043	4.1
052-065	5.0
091	6.0
101-121	8.5
141-161	9.9
195-225	12.0
250-280	12.0

30HZ operating range

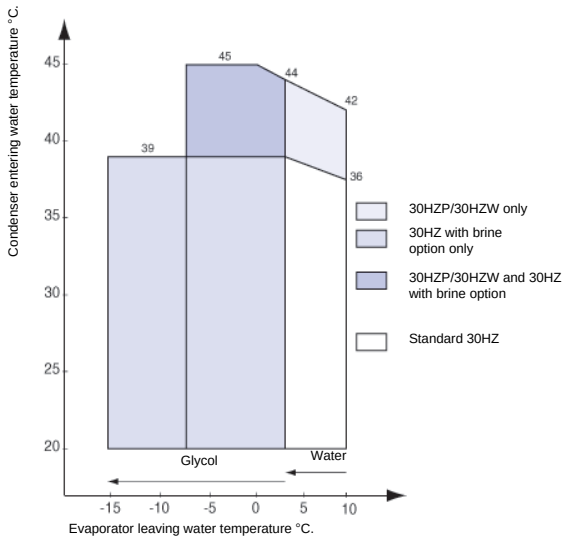

Note: Evaporator and condenser Δt = 5 K.

Water loop volume

Minimum system volume

Whatever the size of the system, the water loop minimum volume (litres) is given by the following formula:
Volume = CAP (kW) x N = litres
where CAP is the nominal system capacity (kW) at the nominal operating conditions of the installation.

Application	N
Air conditioning	3.25
Industrial process cooling	6.50
Low ambient temperature	6.50

This volume is necessary for stable operation and accurate temperature control. It is often necessary to add a buffer water reservoir to the circuit in order to achieve the required volume.

Dimensions/clearances

30HZ 043-065

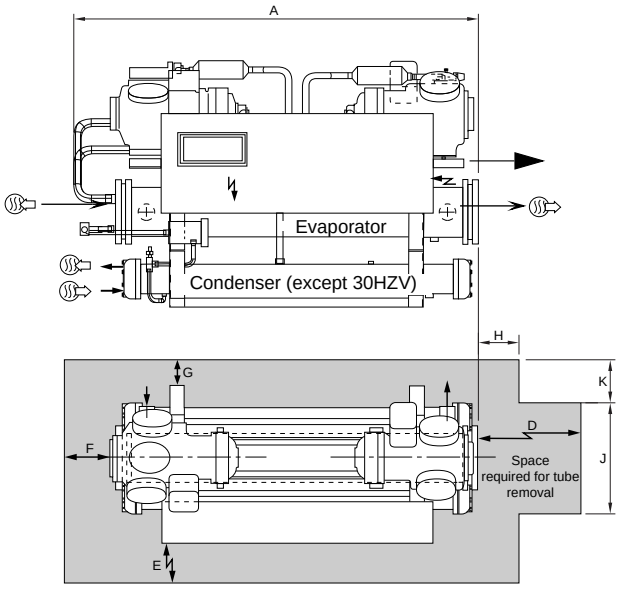

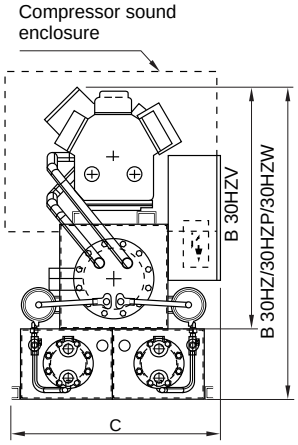

30HZ 091-225

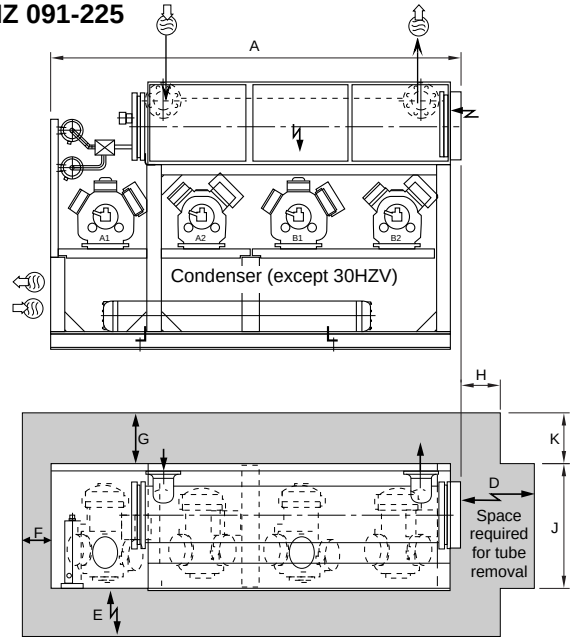

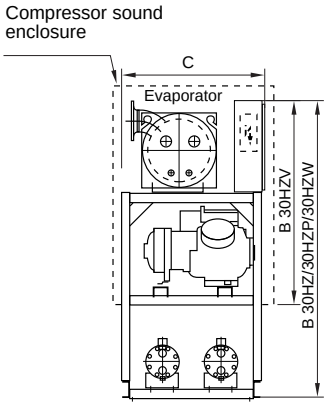

30HZ/30HZ P/W	A	B	C	D	E	F	G	H	J	K
30HZP/30HZW 043	2252	1370	915	1850	750	600	600	600	800	710
30HZP/30HZW 052-065	2550	1355	915	2200	750	600	600	600	800	710
30HZP/30HZW 091	2630	1915	950	2550	800	800	800	800	850	850
30HZP/30HZW 101-121	2940	1915	950	2500	800	800	800	800	850	900
30HZP/30HZW 141-161	3350	1915	950	2500	800	800	800	800	850	900
30HZP/30HZW 195-225	4255	1950	950	2150	800	800	800	800	850	900
30HZP/30HZW 250-280	4070	2000	1275	2750	1000	800	1000	800	950	900
30HZV 043	2252	1110	905	1850	750	600	600	600	800	710
30HZV 052-065	2550	1095	905	2200	750	600	600	600	800	710
30HZV 091	2630	1300	950	2500	800	800	800	800	850	900
30HZV 101-121	2950	1300	950	2500	800	800	800	800	850	900
30HZV 141-161	3350	1300	950	2500	800	800	800	800	850	900
30HZV 195-225	4255	1340	950	2150	800	800	800	800	850	900
30HZV 250-280	4070	1680	1275	2750	1000	800	1000	800	950	900

30HZ 250-280

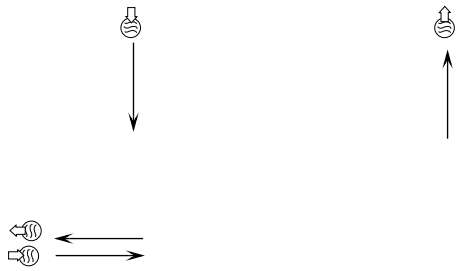

Caution: two separate power supplies

Space required for tube removal

Legend:
All dimensions are given in mm.

Required clearance space for servicing.

Power supply

Water inlet

Water outlet

Certified dimensional drawings are available on request.

Cooling capacities

		30HZ															30HZW				
		Condenser entering water temperature °C																			
	LWT °C	25					30					35					40				
30HZ		CAP kW	COMP kW	UNIT kW	COOL kPa	COND kPa	CAP kW	COMP kW	UNIT kW	COOL kPa	COND kPa	CAP kW	COMP kW	UNIT kW	COOL kPa	COND kPa	CAP kW	COMP kW	UNIT kW	COOL kPa	COND kPa
043	6	138	34.7	36	20	33	129	36.8	37.9	17	30	119	38.7	39.6	15	28	110	40.2	41.1	13	25
052		159	43.8	45.7	19	44	147	46.5	48.2	16	41	136	48.9	50.3	14	37	125	51	52.2	12	34
065		204	61	64	29	51	191	64	67	26	47	179	67	69	23	44	166	69	71	20	41
091		239	62	64	19	27	222	66	68	16	24	206	69	71	14	23	191	72	74	12	21
101		278	70	73	14	38	260	74	76	13	35	243	78	80	11	32	225	81	83	10	30
111		309	77	80	18	32	289	82	85	15	30	270	87	89	14	28	251	91	92	12	25
121		325	83	85	19	26	305	88	90	17	24	284	93	95	15	22	264	97	99	13	20
141		383	100	104	23	36	359	106	109	20	33	335	111	114	17	31	311	116	118	15	28
161		427	117	122	28	38	401	124	129	25	36	375	131	135	22	33	350	137	140	19	31
195		549	146	154	32	51	513	155	162	28	47	480	163	169	25	44	447	170	175	22	41
225		643	176	188	44	59	603	186	197	39	56	563	196	205	34	52	524	204	212	29	48
250		746	209	225	54	63	698	220	234	47	58	652	231	243	41	54	606	240	251	35	50
280		812	236	254	64	61	760	249	265	56	56	709	261	274	48	52	660	271	283	42	48
043	7	143	35	36.5	21	35	134	37.3	38.5	19	32	124	39.2	40.3	16	30	115	40.9	41.8	14	27
052		165	44.3	46.4	20	47	153	47.1	48.9	18	43	142	49.6	51.2	15	40	131	51.8	53.2	13	37
065		212	62	66	31	54	199	66	68	28	49	186	68	71	24	47	173	71	73	21	43
091		247	63	65	20	28	230	67	69	18	26	214	70	72	15	24	198	73	75	13	22
101		288	71	74	15	40	270	75	78	14	37	252	79	81	12	34	234	82	84	10	32
111		319	78	82	19	34	300	83	86	17	31	280	88	90	15	29	261	92	94	13	27
121		337	84	86	21	27	316	89	92	18	25	295	94	96	16	24	274	99	100	14	22
141		396	102	106	24	38	371	108	112	21	35	347	113	116	19	33	322	118	121	16	30
161		442	118	124	30	40	415	126	131	27	38	388	133	137	23	35	362	139	143	20	33
195		570	148	157	35	54	533	157	165	31	50	499	165	172	27	47	465	173	179	23	43
225		667	179	192	47	63	626	189	201	42	59	585	199	210	37	55	545	208	217	32	51
250		768	212	229	57	66	719	224	239	50	61	672	235	247	44	57	625	244	255	38	52
280		836	239	259	67	64	783	252	270	59	59	731	265	280	52	55	681	276	288	45	51
043	8	149	35.4	37	23	37	139	37.7	39.1	20	34	129	39.8	41	17	32	120	41.6	42.6	15	29
052		171	44.8	47.1	21	50	160	47.7	49.7	19	47	148	50.4	52.1	16	43	137	52.7	54.2	14	39
065		220	63	67	33	57	206	67	70	29	52	193	70	72	26	49	180	72	75	23	46
091		255	63	66	21	30	238	68	70	19	27	222	71	73	16	25	205	75	76	14	23
101		298	72	75	16	43	279	76	79	15	40	261	80	83	13	37	243	84	86	11	34
111		330	79	83	20	36	310	85	88	18	33	290	89	92	16	31	270	93	96	14	29
121		349	84	88	22	29	327	90	93	20	27	306	95	98	17	25	285	100	102	15	23
141		409	103	108	26	40	383	109	114	23	37	358	115	119	20	35	334	120	123	17	32
161		456	120	126	33	42	429	128	133	29	40	402	135	140	25	37	375	142	146	22	35
195		591	150	161	37	57	554	160	169	33	53	518	168	176	29	50	483	176	183	25	46
225		691	181	196	51	67	649	193	206	45	63	607	203	214	39	58	566	212	222	34	54
250		790	215	233	60	69	741	227	243	53	65	692	238	252	46	60	644	248	260	40	55
280		859	242	264	71	67	806	256	275	63	62	753	269	285	55	58	702	280	294	48	54
043	10	160	36	38	26	42	150	38.6	40.3	23	39	140	40.8	42.3	20	36	130	42.8	44.1	18	33
052		186	45.3	48.1	25	56	173	48.6	51.1	22	53	160	51.7	53.8	19	49	148	54.3	56.1	17	45
065		235	66	70	37	64	221	69	73	33	59	207	72	76	30	56	193	75	78	26	52
091		272	65	68	24	33	255	69	72	21	31	237	73	75	19	28	220	77	78	16	26
101		319	73	77	19	48	300	78	82	17	45	280	83	86	15	41	261	86	89	13	38
111		352	81	86	23	40	331	87	91	20	37	311	92	95	18	35	290	97	99	16	32
121		372	86	90	25	33	351	92	96	23	30	329	98	101	20	28	306	103	105	17	26
141		436	106	112	30	45	409	113	118	26	41	383	119	123	23	39	357	124	128	20	36
161		487	123	130	37	47	458	131	138	33	44	429	139	145	29	41	401	146	151	25	39
195		634	155	167	43	65	595	165	176	38	59	558	174	183	33	56	521	182	191	29	52
225		740	187	205	58	76	696	199	215	52	71	653	210	224	46	66	610	220	232	40	61
250		836	220	242	68	76	784	234	253	59	71	734	246	262	52	66	684	256	270	45	61
280		909	249	274	80	73	853	264	285	70	69	799	277	296	62	64	745	289	305	54	59

Legend:

LWT - Leaving water temperature °C
CAP kW - Net cooling capacity (gross cooling capacity minus water pump heat against the internal evaporator pressure drop)
COMP kW - Compressor power input
UNIT kW - Effective power input (power input of the compressor, controls, evaporator and condenser pumps, against the internal evaporator pressure drop)
COOL kPa - Evaporator water pressure drop
COND. kPa - Condenser water pressure drop

Capacity at Eurovent conditions

The published performances are Eurovent certified in accordance with document 6/C/003.

Correction factors for Eurovent laboratory test:

Net cooling capacity	1.000
Energy efficiency ratio	1.000
Evaporator pressure drop	1.000
Condenser pressure drop	1.000

Application data:

Refrigerant: R-407C
Condenser and evaporator temperature difference: 5 K
Evaporator fluid: Water
Fouling factor: 0.44×10^{-4} $(m^2K)/W$
Evaporator water flow (l/s): $CAP_{(kW)} \times 860/(5_{(K)} \times 3600)$
Condenser water flow (l/s): $(CAP_{(kW)} + COMP_{(kw)} \times 860/5_{(K)} \times 3600$
Total heat rejection THR (kW) = $CAP_{(kW)} + COMP_{(kW)}$

Cooling capacities (30HZV condenserless units)

		Compressor discharge pressure (kPa)																			
		1543 (40.2/35)*					1745 (45/40)*					1967 (49.85/45)*					2208 (54.63/50)*				
30HZV	LWT °C	CAP kW	UNIT kW	COMP kW	COOL l/s	COOL kPa	CAP kW	UNIT kW	COMP kW	COOL l/s	COOL kPa	CAP kW	UNIT kW	COMP kW	COOL l/s	COOL kPa	CAP kW	UNIT kW	COMP kW	COOL l/s	COOL kPa
043	6	138	33.8	33.4	6.6	20	129	36	35.7	6.2	18	120	38	37.7	5.8	15	111	39.7	39.5	5.3	13
052		159	42.5	42	7.6	19	149	45.4	45	7.1	17	138	47.9	47.6	6.6	15	127	50.3	50	6.1	13
065		211	57	56	10.1	31	198	61	60	9.5	28	186	64	63	8.9	25	174	67	67	8.3	22
091		239	61	60	11.4	19	223	65	65	10.7	17	208	69	68	9.9	14	192	72	72	9.2	12
101		284	67	67	13.6	15	266	72	71	12.7	13	249	76	75	11.9	12	232	80	79	11.1	10
111		304	75	75	14.6	17	286	81	80	13.7	15	267	85	85	12.8	13	248	89	89	11.9	12
121		325	82	81	15.6	19	305	88	87	14.6	17	285	93	92	13.7	15	265	98	97	12.7	13
141		386	98	97	18.5	23	362	104	103	17.4	20	339	110	110	16.2	18	315	116	115	15.1	15
161		422	118	117	20.3	28	398	126	124	19.1	25	374	133	132	17.9	22	350	140	138	16.8	19
195		544	145	143	26.1	32	512	154	152	24.5	28	479	163	161	23	25	447	171	169	21.4	22
225		640	176	172	30.8	44	602	187	183	28.9	39	565	197	194	27.1	34	527	206	203	25.3	30
250		745	208	201	35.9	54	700	220	215	33.7	47	655	231	227	31.5	41	611	242	238	29.3	36
280		809	236	228	39	63	760	250	243	36.6	56	711	262	257	34.2	49	663	274	269	31.9	42
043	7	144	34.1	33.6	6.9	22	135	36.4	36	6.5	19	126	38.5	38.2	6	17	116	40.3	40.1	5.6	14
052		166	42.9	42.3	8	21	155	45.8	45.4	7.4	18	144	48.6	48.2	6.9	16	133	51	50.7	6.4	14
065		219	58	57	10.5	33	206	62	61	9.9	30	194	65	64	9.3	27	181	68	68	8.7	24
091		248	62	61	11.9	20	232	66	65	11.1	18	216	70	69	10.3	16	200	73	73	9.6	13
101		295	68	67	14.1	16	277	72	72	13.3	14	260	77	76	12.4	13	242	81	80	11.6	11
111		316	76	75	15.1	18	297	81	81	14.2	16	278	86	86	13.3	14	259	91	90	12.4	13
121		337	83	82	16.2	21	317	89	88	15.2	19	297	94	93	14.2	16	277	99	98	13.2	14
141		400	99	97	19.2	25	376	106	104	18	22	352	112	111	16.9	19	328	117	117	15.7	16
161		438	120	118	21	30	413	127	126	19.8	26	388	135	133	18.6	23	363	142	140	17.4	20
195		566	147	144	27.2	35	533	157	154	25.6	31	500	165	163	24	27	467	173	172	22.4	24
225		665	178	173	32	47	626	189	185	30.1	42	588	200	196	28.3	37	550	209	206	26.4	33
250		769	210	203	37.1	57	722	222	217	34.8	50	677	234	229	32.6	44	631	245	241	30.3	39
280		834	239	230	40.3	67	784	253	245	37.8	59	735	266	259	35.4	52	686	277	272	33	45
043	8	150	34.4	33.8	7.2	23	140	36.8	36.3	6.7	21	131	38.9	38.6	6.3	18	122	40.9	40.6	5.8	16
052		173	43.2	42.6	8.3	22	162	46.3	45.8	7.8	20	151	49.1	48.7	7.2	17	139	51.7	51.4	6.7	15
065		228	59	57	10.9	36	215	63	61	10.3	32	201	66	65	9.7	29	188	69	69	9	26
091		257	62	61	12.3	22	241	66	66	11.5	19	224	70	70	10.7	17	208	74	74	10	14
101		306	68	67	14.7	17	288	73	72	13.8	15	270	78	77	12.9	14	252	82	81	12.1	12
111		328	77	76	15.7	20	309	82	81	14.8	18	289	87	86	13.9	16	270	92	91	12.9	14
121		350	84	82	16.8	23	330	90	89	15.8	20	309	95	94	14.8	18	288	100	100	13.8	15
141		414	100	98	19.9	27	390	107	105	18.7	24	365	113	112	17.5	21	341	119	118	16.3	18
161		453	121	119	21.8	32	427	129	127	20.5	28	402	137	135	19.3	25	377	144	142	18.1	22
195		589	149	145	28.3	37	554	159	156	26.6	33	520	168	165	25	29	486	176	174	23.3	26
225		691	181	175	33.3	51	651	192	187	31.4	46	612	203	199	29.4	40	572	213	209	27.5	35
250		793	212	205	38.3	61	746	225	219	35.9	54	699	237	232	33.7	47	652	248	244	31.4	41
280		860	242	232	41.6	72	809	256	247	39.1	63	758	269	262	36.6	56	708	281	276	34.1	49
043	10	162	34.9	34.2	7.8	27	152	37.4	36.8	7.3	24	142	39.8	39.3	6.8	21	132	42	41.6	6.3	18
052		188	43.8	43	9	26	176	47.1	46.5	8.4	23	164	50.2	49.7	7.9	20	152	53	52.6	7.3	18
065		245	60	59	11.8	41	232	64	63	11.1	37	218	68	67	10.5	33	204	71	71	9.8	29
091		276	63	62	13.2	25	259	68	67	12.4	22	241	72	71	11.6	19	224	76	75	10.8	17
101		330	69	68	15.8	20	311	74	73	14.9	18	292	79	78	14	16	273	84	83	13.1	14
111		353	78	76	16.9	23	333	83	82	16	20	312	89	88	15	18	292	94	93	14	16
121		377	85	83	18.1	26	355	91	90	17.1	23	334	97	96	16	21	312	103	102	15	18
141		444	102	100	21.4	31	419	109	107	20.1	27	393	116	114	18.9	24	367	122	121	17.6	21
161		485	124	121	23.3	37	458	132	130	22	33	431	140	138	20.7	29	405	147	146	19.4	25
195		636	152	148	30.6	43	599	163	159	28.9	39	563	172	169	27.1	34	527	182	179	25.3	30
225		745	185	178	36	59	703	197	191	33.9	53	661	209	204	31.9	47	620	219	215	29.8	41
250		842	217	208	40.7	69	793	230	223	38.3	61	744	243	236	35.9	54	695	255	249	33.5	47
280		913	247	235	44.3	81	860	262	252	41.7	72	808	276	268	39	63	755	289	282	36.4	55

Legend:

LWT - Leaving water temperature °C
CAP kW - Net cooling capacity (gross cooling capacity minus water pump heat against the internal evaporator pressure drop)
COMP kW - Compressor power input
UNIT kW - Effective unit power input (power input of the compressor, controls, evaporator pumps against the internal evaporator pressure drop)
COOL kPa - Evaporator water pressure drop
COOL l/s - Evaporator water flow rate
THR - Total heat rejection $THR_{(kW)} = CAP_{(kW)} + COMP_{(kW)}$

Capacity at Eurovent conditions

The published performances are Eurovent certified in accordance with document 6/C/003.

Correction factors for Eurovent laboratory test:

Net cooling capacity	1.000
Energy efficiency ratio	1.000
Evaporator pressure drop	1.000

Application data:

Refrigerant: R-407C
Evaporator temperature drop: 5 K
Evaporator fluid: Water
Fouling factor: 0.44 x 10^{-4} (m^2K)/W
Evaporator water flow (l/s): $CAP_{(kW)}$ x 860/($5_{(K)}$ x 3600)
Fluid temperature = condensing temperature dew point - refrigerant glide - 5 K subcooling

* Dewpoint and bubble temperatures corresponding to the compressor discharge pressure

Technical description

Water-cooled packaged liquid chillers for indoor installation, equipped with numerical control and electronic expansion valves (30HZ 091-280) and operating with chlorine-free refrigerant HFC-407C.

Quality assurance

Designed and manufactured in a factory, accredited to Quality Assurance Standard ISO 9001. Performances in accordance with EUROVENT recommendations.

Chassis

Brazed steel or bolted chassis, with polyester-powder paint finish, baked-in electrostatically before assembly, colour dark grey (RAL 7037).

Compressors

- Semi-hermetic reciprocating Carrier compressors with anti-friction treatment for operation with HFC-407C, lubricated by POE oil, using a reversible oil pump. Crankcase heater includes a protection device that stops the compressor in case of a fault.
- Electric motor with two windings, cooled by suction gas and protected against abnormal operating conditions by: thermo-magnetic circuit breaker (breaking capacity 22 kA), ground current detector to avoid acid formation (multi-compressor circuit).
- Each compressor is mounted on anti-vibration dampers and equipped with a discharge muffler and suction and discharge service valves.
- Condenserless 30HZV version: electronic compressor oil pressure protection and display for each circuit.

Condensers

Two multi-tube condensers with integrated subcooling circuit, copper tubes with spike fin surface on the outside and grooved inside surface expanded into tube sheets. Water connections threaded (FPT) or with flat flange with counterflanges supplied to be brazed on site.
Heat pump version 30HZP: shell insulation of 19 mm closed-cell polyurethane foam.

Evaporator

Multi-tube evaporator with or two refrigerant circuits, internally finned copper tubes, expanded into tube sheets with internal polypropylene baffles. Water connections threaded (MPT) or with standard flat flange. Thermal insulation of the shell and end covers using 19 mm closed-cell polyurethane.

Refrigerant circuits

Each circuit includes: one or more compressors, replaceable-core filter drier, combined moisture indicator and sightglass, liquid line shut-off/drain valve, thermostatic expansion valve or Carrier long-stroke electronic expansion valve EXV (30HZ 091-280), controlled by a stepper motor (1500 steps) for improved refrigerant flow control and pump-down, dual-safety high pressure switch.

Condenserless version 30HZV: check valve on discharge line (one per circuit for 30HZV 043-225 and two per circuit for 30HZV 250-280).

Control box, power and control wiring

Galvanized sheet steel, polyester paint finish, colour light grey (RAL 7035), with hinged access doors, containing: one circuit breaker and two contactors per compressor (part-winding start on 30HZ 043-065), control circuit transformer, 3-phase power supply terminals (30HZ 250-280 units have two power supply points), and separate 230 V power supply for crankcase heaters. Rear of control box painted, control circuit cables and electrical components numbered.

Numeric PRO-DIALOG Plus control accessible without opening the control box, offers:

- PID control of leaving water temperature with return temperature compensation for control of compressors and electronic expansion valves (30HZ 091-280).
- Protection against abnormal operating conditions, compressor faults, high or low refrigerant pressure, low suction temperature, insufficient chilled water flow, evaporator freeze-up, etc.
- Communications
  Display of parameters: suction and discharge pressures and temperatures, evaporator entering/leaving water temperatures, condenser entering/leaving water temperatures (30HZP heat pump version), number of compressors running, compressor operating hours, history of recorded faults, etc.
  Remote location of controls: start/stop, dual setpoint, setpoint calibration, demand limit control, general fault reporting by circuit.
  Series RS485 port for connection to a building monitoring system.

Delivery

All chillers are factory-tested before shipping. Standard packing: wooden pallet and plastic wrapping.

NOTES for electrical data:

- **30HZ units have a single power connection point (except 30HZ 250-280, which have two power points).**
- **The control box includes the following standard features:**
  - **Starter and motor protection devices for each compressor**
  - **Control devices**
- **Field connections:**
  All connections to the system and the electrical installations must be in full accordance with all applicable codes.
- **The Carrier 30HZ chillers are designed and built to ensure conformance with local codes. The recommendations of European standard EN 60204-1 (machine safety - electrical machine components - part 1: general regulations) are specifically taken into account, when designing the electrical equipment.**

IMPORTANT:

- **Conformance with EN 60204-1 is the best means of ensuring compliance with the Machines Directive and § 1.5.1. Generally the recommendations of IEC 364 are accepted as compliance with the requirements of the installation directives.**
- **Annex B of EN 60204-1 describes the electrical characteristics used for the operation of the machines.**

1. **The operating environment for the 30HZ chillers is specified below:**
   - **Environment* - Environment as classified in IEC 364 § 3:**
     - **ambient temperature range: +5°C to +40°C, class AA4***
     - **humidity range (non-condensing)*:**
       50% relative humidity at 40°C
       90% relative humidity at 20°C
     - **altitude: ≤ 2000 m**
     - **indoor installation***
     - **presence of water: class AD2 (possibility of water droplets)***
     - **presence of hard solids, class AE2 (no significant dust present)***
     - **presence of corrosive and polluting substances, class AF1 (negligible)**
     - **vibration and shock, class AG2, AH2**
   - **Competence of personnel, class BA4* (trained personnel - IEC 364)**
2. **Power supply frequency variation: ± 2 Hz.**
3. **he neutral (N) line must not be connected directly to the unit (if necessary use a transformer).**
4. **Overcurrent protection of the power supply conductors is not provided with the unit.**
5. **The optional factory-installed circuit breaker is of type "a" (EN 60 204-1 § 5.3.2).**

NOTE:
If particular aspects of an actual installation do not conform to the conditions described above, or if there are other conditions which should be considered, always contact your local Carrier representative.

*** The protection level required to conform to this class is IP21B (according to reference document IEC 529). All 30HZ units are protected to IP23C and fulfill this protection condition.**

Carrier

Order No. 13180-20, August 1997. Supersedes order No. 13180-20, May 1997.
Manufacturer reserves the right to change any product specifications without notice.

The cover photo is solely for illustration purposes, and is not contractually binding.

Manufactured by: Carrier SA, Montluel, France.
Printed on Totally Chlorine Free Paper.
Printed in the Netherlands.