AQUAZONE™
50VQP084-300
Vertical Large Capacity Water Source Heat Pumps
with PURON® Refrigerant (R-410A)
50 Hz

Installation, Start-Up, and Service Instructions

CONTENTS

IMPORTANT: Read the entire instruction manual before starting installation.

SAFETY CONSIDERATIONS

Installation and servicing of air-conditioning equipment can be hazardous due to system pressure and electrical components. Only trained and qualified service personnel should install, repair, or service air-conditioning equipment.

Untrained personnel can perform basic maintenance functions of cleaning coils and filters and replacing filters. All other operations should be performed by trained service personnel. When working on air-conditioning equipment, observe precautions in the literature, tags and labels attached to the unit, and other safety precautions that may apply.

Improper installation, adjustment, alteration, service, maintenance, or use can cause explosion, fire, electrical shock or other conditions which may cause personal injury or property damage. Consult a qualified installer, service agency, or your distributor or branch for information or assistance. The qualified installer or agency must use factory-authorized kits or accessories when modifying this product. Refer to the individual instructions packaged with the kits or accessories when installing.

Follow all safety codes. Wear safety glasses and work gloves. Use quenching cloth for brazing operations. Have fire extinguisher available. Read these instructions thoroughly and follow all warnings or cautions attached to the unit. Consult local building codes and the National Electrical Code (NEC, U.S.A.) for special installation requirements.

Understand the signal words — DANGER, WARNING, and CAUTION. DANGER identifies the most serious hazards which will result in severe personal injury or death. WARNING signifies hazards that could result in personal injury or death. CAUTION is used to identify unsafe practices, which would result in minor personal injury or product and property damage.

Recognize safety information. This is the safety-alert symbol (⚠). When you see this symbol on the unit and in instructions or manuals, be alert to the potential for personal injury.

⚠ WARNING

Electrical shock can cause personal injury or death. Before installing or servicing system, always turn off main power to system. There may be more than one disconnect switch. Turn off accessory heater power if applicable.

GENERAL

This Installation and Start-Up Instructions literature is for Aquazone™ water source heat pump systems.

Water source heat pumps (WSHPs) are single-package vertically mounted units with electronic controls designed for year-round cooling and heating.

IMPORTANT: The installation of water source heat pump units and all associated components, parts, and accessories which make up the installation shall be in accordance with the regulations of ALL authorities having jurisdiction and MUST conform to all applicable codes. It is the responsibility of the installing contractor to determine and comply with ALL applicable codes and regulations.

INSTALLATION

Step 1 — Check Jobsite — Installation, operation and maintenance instructions are provided with each unit. Before unit start-up, read all manuals and become familiar with the unit and its operation. Thoroughly check out the system before operation. Complete the inspections and instructions listed below to prepare a unit for installation. See Table 1 for unit physical data.

Vertical units are designed for indoor installation only and are typically installed in a floor-level closet or a small mechanical room. Refer to Fig. 1 for an example of a typical vertical installation. See Fig. 2 and 3 for overall unit dimensions.

⚠ CAUTION

To avoid equipment damage, do not use these units as a source of heating or cooling during the construction process. The mechanical components and filters used in these units quickly becomes clogged with construction dirt and debris which may cause system damage.

Step 2 — Check Unit — Upon receipt of shipment at the jobsite, carefully check the shipment against the bill of lading. Make sure all units have been received. Inspect the carton or crating of each unit, and inspect each unit for damage. Ensure the shipping company makes proper notation of any shortages or damage on all copies of the freight bill. Concealed damage not discovered during unloading must be reported to the shipping company within 15 days of receipt of shipment.

NOTE: It is the responsibility of the purchaser to file all necessary claims with the shipping company.

1. Verify unit is correct model for entering water temperature of job.
2. Be sure that the location chosen for unit installation provides ambient temperatures maintained above freezing. Well water applications are especially susceptible to freezing.
3. Be sure the installation location is isolated from sleeping areas, private offices and other acoustically sensitive spaces.

   NOTE: A sound control accessory package may be used to help eliminate sound in sensitive spaces.
4. Check local codes to be sure a secondary drain pan is not required under the unit.
5. Be sure unit is mounted at a height sufficient to provide an adequate slope of the condensate lines. If an appropriate slope cannot be achieved, a field-supplied condensate pump may be required.
6. Provide sufficient space for duct connection.
7. Provide adequate clearance for filter replacement and drain pan cleaning. Do not allow piping, conduit, etc. to block filter access.
8. Provide sufficient access to allow maintenance and servicing of the fan and fan motor, compressor and coils. Removal of the entire unit from the closet should not be necessary.
9. Provide an unobstructed path to the unit within the closet or mechanical room. Space should be sufficient to allow removal of unit if necessary.
10. Provide ready access to water valves and fittings, and screwdriver access to unit side panels, discharge collar, and all electrical connections.
11. Where access to side panels is limited, pre-removal of the control box side mounting screws may be necessary for future servicing.

STORAGE — If the equipment is not needed for immediate installation upon its arrival at the jobsite, it should be left in its shipping carton and stored in a clean, dry area of the building or in a warehouse. Units must be stored in an upright position at all times. If carton stacking is necessary, stack units a maximum of 3 high. Do not remove any equipment from its shipping package until it is needed for installation.

Table 1 — 50VQP Unit Physical Data

UNIT 50VQP	084	096	120	150	168	192	240	300
COMPRESSOR QUANTITY	Scroll (1)				Scroll (2)			
Factory Charge HFC-410A (kg) per circuit	3.97	4.42	6.35	7.03	3.97	4.42	6.35	7.03
BLOWER MOTOR								
Blower Motor Quantity	1							
Standard Motor (kW)	.75	1.12	1.49	2.24	1.49	2.24	3.73	3.73
Large Motor (kW)	1.12	1.49	2.24	3.73	2.24	3.73	5.60	5.60
BLOWER								
No. of Blowers	1				2			
Blower Wheel Size D x W (cm)	38.1 x 27.9			38.1 x 38.1	38.1 x 27.9			38.1 x 38.1
WATER CONNECTION SIZE								
FPT (in.) [mm]	1-1/2 [38.1]			2 [50.8]				2-1/2 [63.5]
COAX VOLUME								
Volume (liters)	8.28		9.37	13.11	18.29		24.08	27.98
CONDENSATE CONNECTION SIZE								
FPT (in.) [mm]	1 [25.4]							
AIR COIL DATA								
Air Coil Dimensions H x W (cm)	91.4 x 121.9				91.4 x 121.9			
Air Coil Total Face Area (sq m)	1.11				2.22			
Air Coil Tube Size (cm)	3/8 [0.953]							
Air Coil Fin Spacing (fins per cm)	5.5			4.72	5.5			4.72
Air Coil Number of Rows	2		3	4	2		3	4
MISCELLANEOUS DATA								
Filter Standard Throwaway (qty) (cm)	(4) 45.74 x 63.5 x 2.5				(8) 45.74 x 63.5 x 2.5			
Weight - Operating (kg)	399		422	435	725		755	769
Weight - Packaged (kg)	406		429	442	739		769	782

LEGEND

FPT — Female Pipe Thread

NOTES:

1. All units have grommet and spring compressor mountings, and 2.2 cm and 3.5 cm electrical knockouts.
2. Use the lowest maximum pressure rating when multiple options are combined:

OPTION	MAXIMUM PRESSURE (kPa)
Base Unit	3100
Motorized Water Valve	2750
Internal Secondary Pump	999

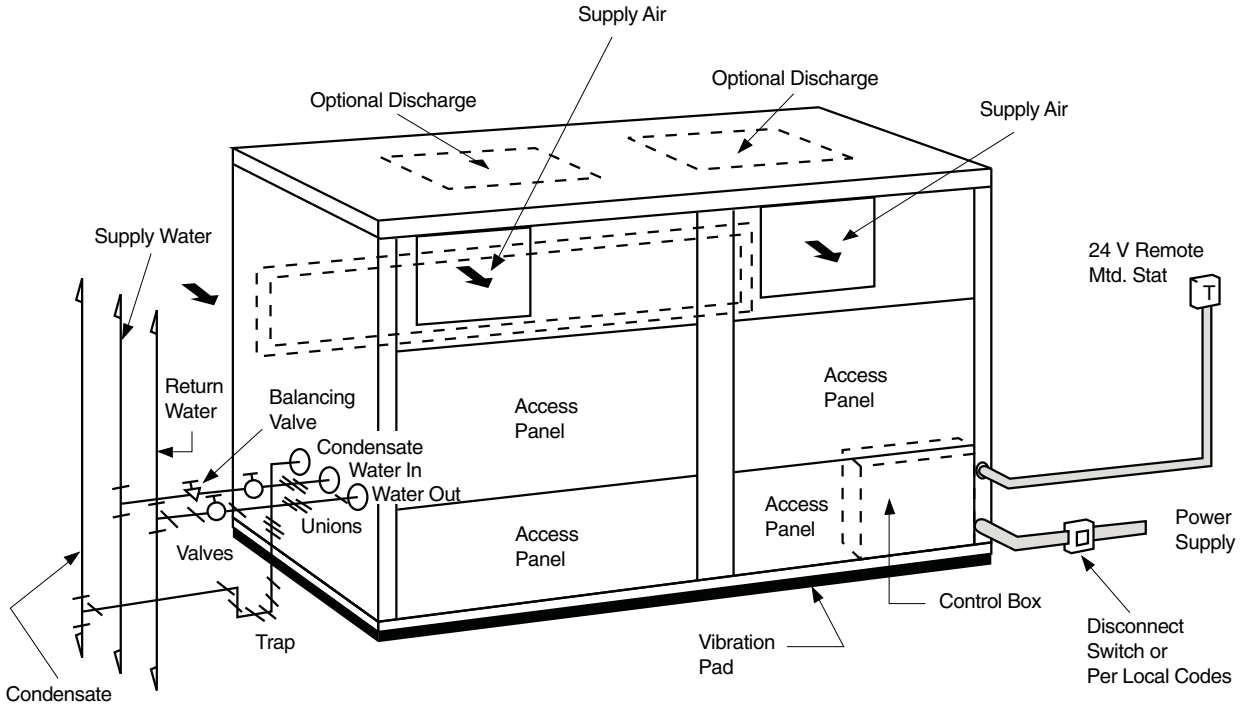

Fig. 1 — Typical 50VQP Unit Installation

ALL CONFIGURATIONS REQUIRE SERVICE ACCESS AREA SHOWN BELOW

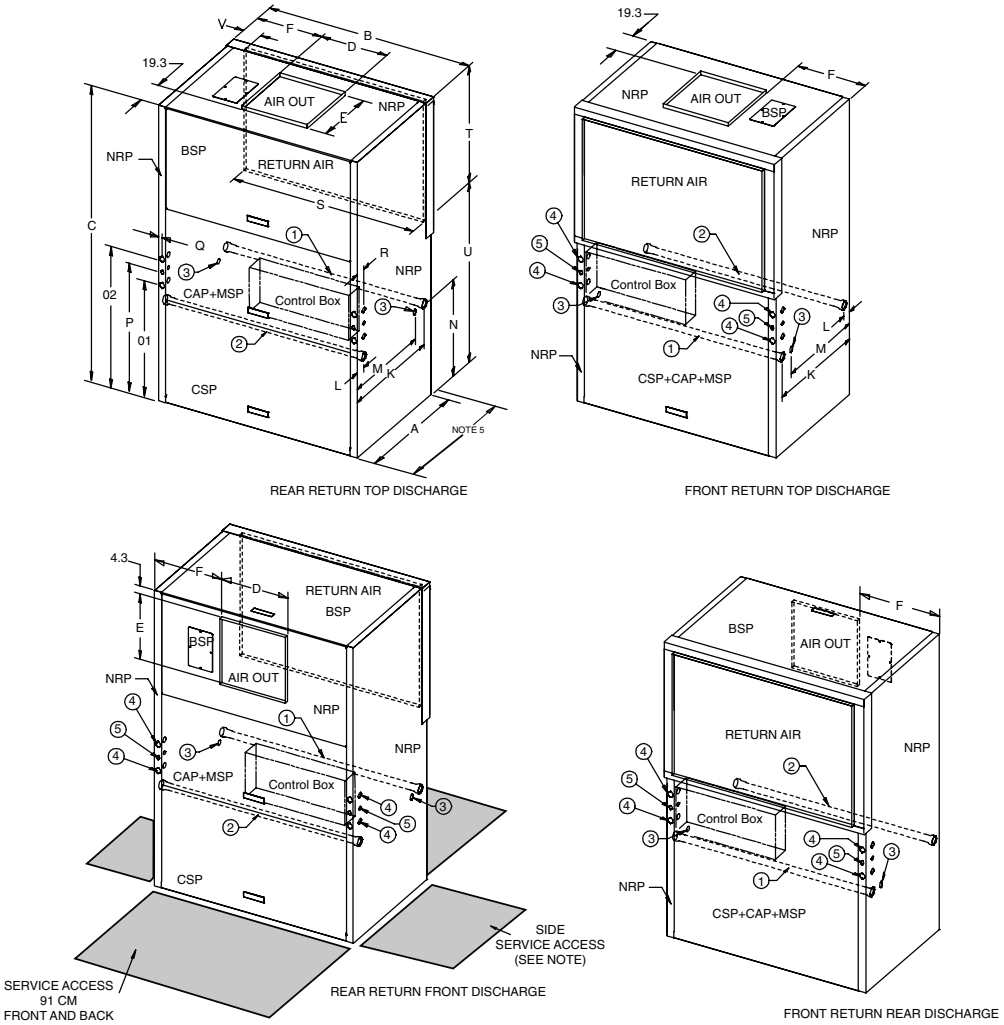

LEGEND

BSP — Blower Service Panel
CAP — Control Access Panel
CSP — Compressor Service Panel
MSP — Motor Service Panel
NRP — Non-Removable Panel

NOTES:

1. All dimensions in centimeters.
2. Units require 0.9 m clearance for water connections, CAP, CSP, MSP, and BSP service access.
3. Overall cabinet height dimension does not include duct flange when in top discharge configuration.
4. Overall cabinet width dimension does not include filter rack and duct flange when on front or back discharge configuration.
5. Side service access must be 0.9 m on either side that connections are made. If no connections are made on a side, then service access can be 15 mm minimum.
6. While access to all removable panels is not required, installer should take care to comply with all building codes and allow adequate clearance for future field service.
7. Water inlet and water outlet connections are available on either side (left or right) of the unit. Two MPT plugs are shipped loose in a plastic bag tied to the water leg in front of the unit. Installer must plug water inlet/outlet side not being connected to.
8. Condensate drain is available on either side (left or right) of unit. Drain hose and drain connection will be tied inside the unit. Installer must untie the drain hose and connect to the condensate drain hole of installer's choice.
9. Electrical access is available on either side (left or right) of unit and is also available (left or right) in the front of the unit.
10. Overall depth — add 7.9 cm for 2.5 or 5 cm filter. Add 13 cm for 10 cm filter.

	CONNECTIONS	50VQP084-120	50VQP150
1	Water Inlet (See Note 7)	$1^1/_2$ in. FPT	2 in. FPT
2	Water Outlet (See Note 7)	$1^1/_2$ in. FPT	2 in. FPT
3	Condensate Drain (See Note 8)	1 in. FPT	1 in. FPT
4	High Voltage Access (See Note 9)	$1^3/_8$ in.	$1^3/_8$ in.
5	Low Voltage Access (See Note 9)	$^7/_8$ in.	$^7/_8$ in.

UNIT 50VQP	OVERALL CABINET (cm)			DISCHARGE CONNECTIONS (cm) Duct Flange			WATER CONNECTIONS (cm)				ELECTRICAL KNOCKOUTS (cm)					RETURN AIR CONNECTIONS (cm) (Using Return Air Opening)			
	A Depth	B Width	C Height	D Supply Width	E Supply Depth	F	K 1-Water Inlet	L 1-Water Outlet	M 3-Condesate	N	O1	O2	P	Q	R	S Return Depth	T Return Height	U	V
084-120	86.4	134.9	200.7	44.5	44.6	45.1	78.7	7.6	68.6	65.1	78.7	96.4	87.7	2.5	7.6	121.9	82.2	113.3	6.9
150	86.4	134.9	200.7	54.4	44.6	45.1	78.7	7.6	68.6	65.1	78.7	96.4	87.7	2.5	7.6	121.9	82.2	113.3	6.9

Fig. 2 — 50VQP084-150 Unit Dimensions

ALL CONFIGURATIONS REQUIRE SERVICE ACCESS AREA SHOWN BELOW

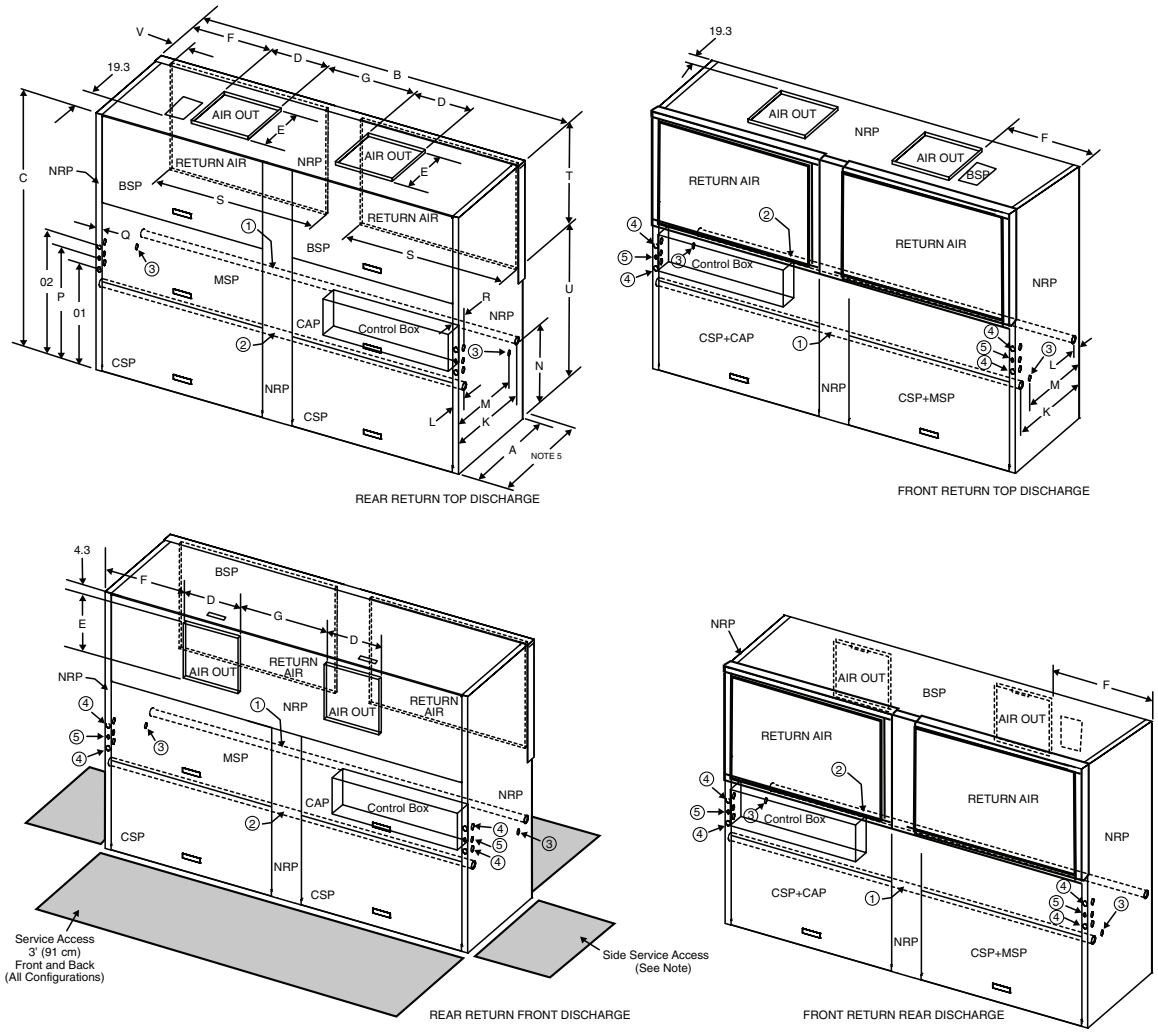

LEGEND

BSP — Blower Service Panel
CAP — Control Access Panel
CSP — Compressor Service Panel
MSP — Motor Service Panel
NRP — Non-Removable Panel

NOTES:

1. All dimensions in centimeters.
2. Units require 91 cm clearance for water connections, CAP, CSP, MSP, and BSP service access.
3. Overall cabinet height dimension does not include duct flange when in top discharge configuration.
4. Overall cabinet width dimension does not include filter rack and duct flange when on front or back discharge configuration.
5. Side service access must be 91 cm on either side that connections are made. If no connections are made on a side, then service access can be 15 mm minimum.
6. While access to all removable panels is not required, installer should take care to comply with all building codes and allow adequate clearance for future field service.
7. Water inlet and water outlet connections are available on either side (left or right) of the unit. Two MPT plugs are shipped loose in a plastic bag tied to the water leg in front of the unit. Installer must plug water inlet/outlet side not being connected to.
8. Condensate drain is available on either side (left or right) of unit. Drain hose and drain connection will be tied inside the unit. Installer must untie the drain hose and connect to the condensate drain hole of installer's choice.
9. Electrical access is available on either side (left or right) of unit and is also available (left or right) in the front of the unit.
10. Overall depth — add 7.9 cm for 2.5 or 5 cm filter. Add 13 cm for 10 cm filter.

	CONNECTIONS	50VQP168-240	50VQP300
1	Water Inlet (See Note 7)	2 in. FPT	2 1/2 in. FPT
2	Water Outlet (See Note 7)	2 in. FPT	2 1/2 in. FPT
3	Condensate Drain (See Note 8)	1 in. FPT	1 in. FPT
4	High Voltage Access (See Note 9)	1 3/8 in.	1 3/8 in.
5	Low Voltage Access (See Note 9)	7/8 in.	7/8 in.

UNIT 50VQP	OVERALL CABINET (cm)			DISCHARGE CONNECTIONS (cm) Duct Flange				WATER CONNECTIONS (cm)				ELECTRICAL KNOCKOUTS (cm)					RETURN AIR CONNECTIONS (cm) (Using Return Air Opening)			
	A Depth	B Width	C Height	D Supply Width	E Supply Depth	F	G	K 1-Water Inlet	L 2-Water Outlet	M 3-Condensate	N	O1	O2	P	Q	R	S Return Depth	T Return Height	U	V
168-240	86.4	270.9	200.7	44.5	44.6	45.1	79.4	78.7	7.6	68.6	65.1	78.1	96.4	87.8	2.5	7.6	121.9	82.2	113.3	6.9
300	86.4	270.9	200.7	54.4	44.6	45.1	59.4	78.7	7.6	68.6	65.1	78.1	96.4	87.8	2.5	7.6	121.9	82.2	113.3	6.9

Fig. 3 — 50VQP168-300 Unit Dimensions

PROTECTION — Once the units are properly positioned on the jobsite, they must be covered with either a shipping carton, vinyl film, or an equivalent protective covering. Open ends of pipes stored on the jobsite must be capped. This precaution is especially important in areas where painting, plastering, or spraying of fireproof material, etc. is not yet complete. Foreign material that is allowed to accumulate within the units can prevent proper start-up and necessitate costly clean-up operations.

Before installing any of the system components, be sure to examine each pipe, fitting, and valve, and remove any dirt or foreign material found in or on these components.

⚠ CAUTION

DO NOT store or install units in corrosive environments or in locations subject to temperature or humidity extremes (e.g., attics, garages, rooftops, etc.). Corrosive conditions and high temperature or humidity can significantly reduce performance, reliability, and service life. Always move units in an upright position. Tilting units on their sides may cause equipment damage.

INSPECT UNIT — To prepare the unit for installation, complete the procedures listed below:

1. Compare the electrical data on the unit nameplate with ordering and shipping information to verify that the correct unit has been shipped.
2. Do not remove the packaging until the unit is ready for installation.
3. Verify that the unit's refrigerant tubing is free of kinks or dents, and that it does not touch other unit components.
4. Inspect all electrical connections. Be sure connections are clean and tight at their terminations.
5. Loosen compressor bolts until the compressor rides freely on springs. Remove shipping restraints.
6. Remove the four 1/4 in. (6 mm) shipping bolts from compressor support plate (two bolts on each side) to maximize vibration and sound alternation.

⚠ CAUTION

Failure to remove shipping brackets from spring-mounted compressors will cause excessive noise and could cause component failure due to added vibration.

7. Remove any blower support cardboard from inlet of the blower.
8. Locate and verify any accessory kit located in compressor and/or blower section.
9. Remove any access panel screws that may be difficult to remove once unit is installed.

Step 3 — Locate Unit — The following guidelines should be considered when choosing a location for a WSHP:

- Units are for indoor use only.
- Locate in areas where ambient temperatures are between 4.4 C and 37.8 C and relative humidity is no greater than 75%.
- Provide sufficient space for water, electrical and duct connections.

  NOTE: Water inlets/outlets and high/low voltage electrical access are available on either side of the unit. Electrical access is also available on the unit front. See Fig. 2 and 3.
- Locate unit in an area that allows for easy access and removal of filter and access panels.

  NOTE: Unit has full filter frame bottom access for 25, 51, or 102 mm filters.
- ALLOW enough space for service personnel to perform maintenance.
- Provisions must be made for return air to freely enter the space if unit needs to be installed in a confined area such as a closet.

Step 4 — Mount the Unit — Vertical units are available in rear or front return air configurations.

DISCHARGE CONFIGURATION CONVERSION — To change the discharge configuration of the unit from top discharge to straight (right or left) discharge, follow the procedure below. To change the discharge configuration of the unit from straight (right or left) discharge to top discharge, reverse the procedure below.

1. Remove the 3 panels as shown in Fig. 4.

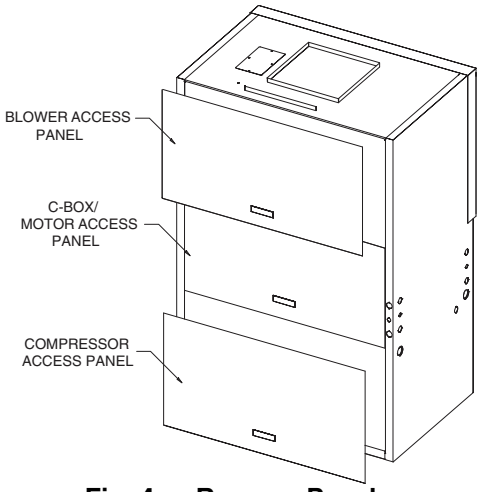

Fig. 4 — Remove Panels

2. Remove blockoff air handler. Loosen belt and remove. See. Fig. 5.

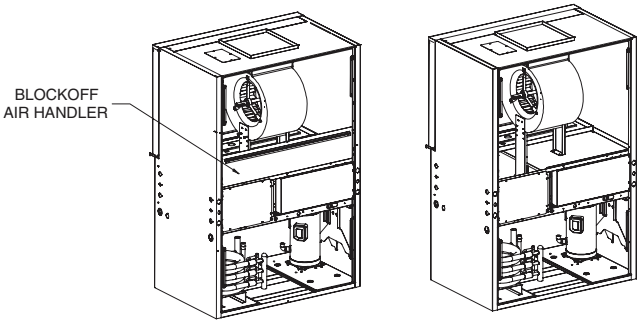

Fig. 5 — Remove Blockoff Air Handler and Belt

3. Remove 4 bolts from blower panel. Remove 4 bolts (2 bolts on each side) from blower sides. See Fig. 6.

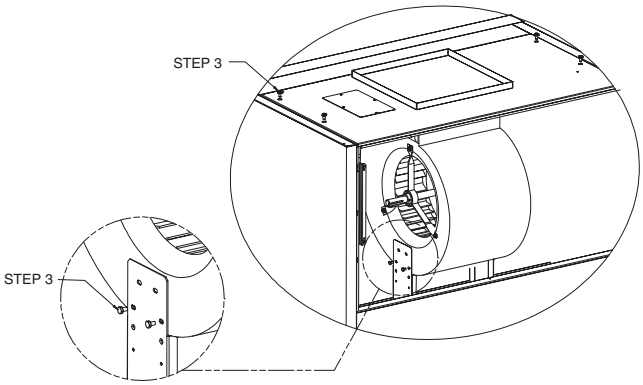

Fig. 6 — Remove Bolts from Blower Panel and Sides

4. Remove 4 bolts and take blower glides out. See Fig. 7.

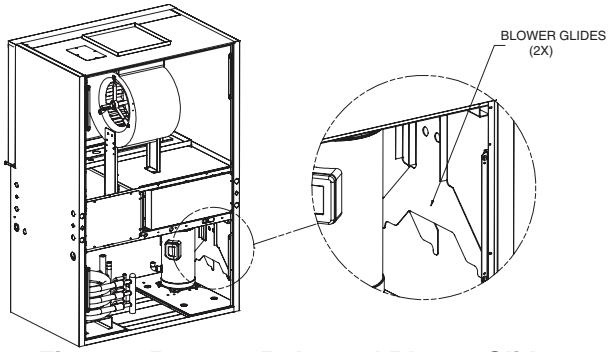

Fig. 7 — Remove Bolts and Blower Glides

5. Attach blower glides to blower bottom load brackets as shown in Fig. 8. Use bottom set of holes on blower bottom load brackets. The blower shaft should be sitting directly on top of the blower glides.

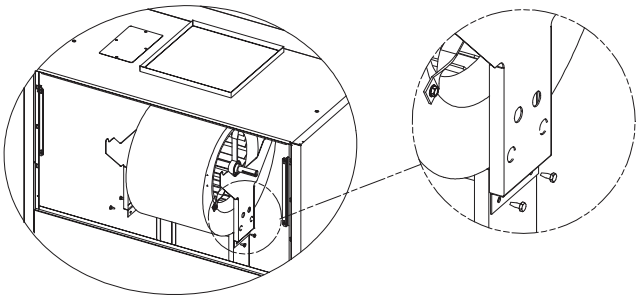

Fig. 8 — Attach Blower Glides

6. Stand in front and pull the blower assembly on to the ridge of the blower glides. See Fig. 9.

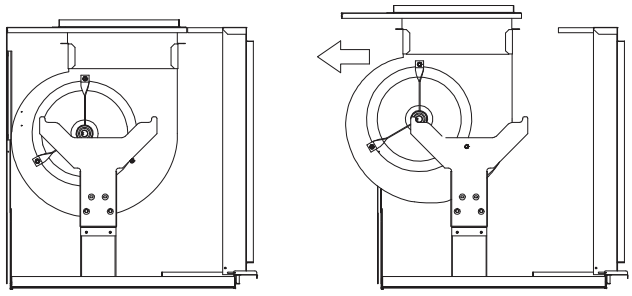

Fig. 9 — Pull Blower Assembly to Glides

7. Rotate blower assembly using the blower glides as a guiding track. See Fig. 10.

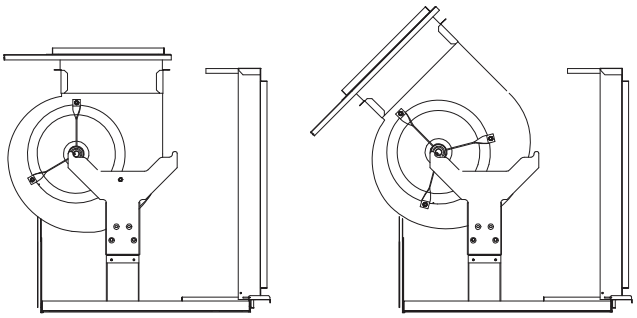

Fig. 10 — Rotate Blower Assembly

8. When the blower assembly is parallel to the floor, push the blower assembly back so the blower panel is flush with the unit. See. Fig. 11.

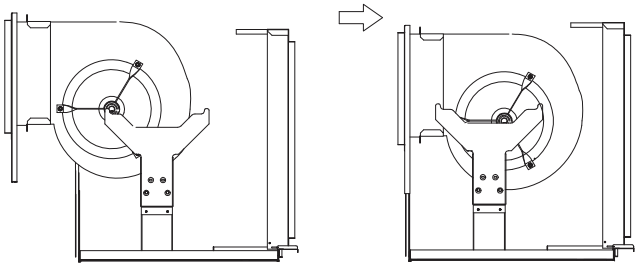

Fig. 11 — Push in Blower Assembly

9. Attach blower assembly with 4 bolts as shown in Fig. 12.

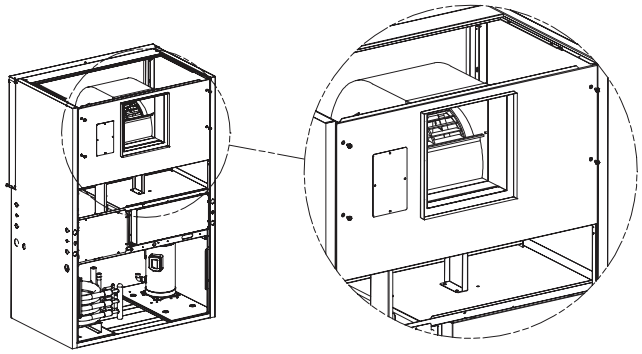

Fig. 12 — Attach Blower Asembly

10. Remove the 2 blower glides and reattach back into compressor section. See Fig. 13.

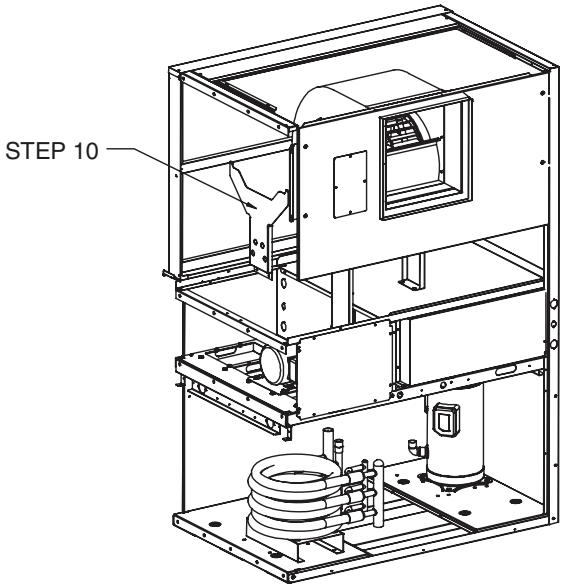

Fig. 13 — Remove Blower Glides and Reattach

11. Use four 1/4 in. (6 mm) 20 UNC bolts (2 bolts on each side) to bolt blower assembly to blower bottom load brackets. Reattach belt and tighten. See Fig. 14.

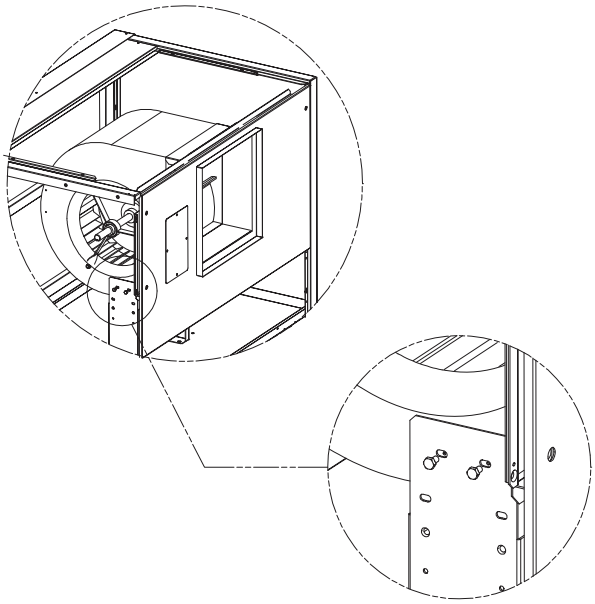

Fig. 14 — Bolt Blower Assembly to Load Brackets

12. Reattach blockoff air handler as shown in Fig. 15.

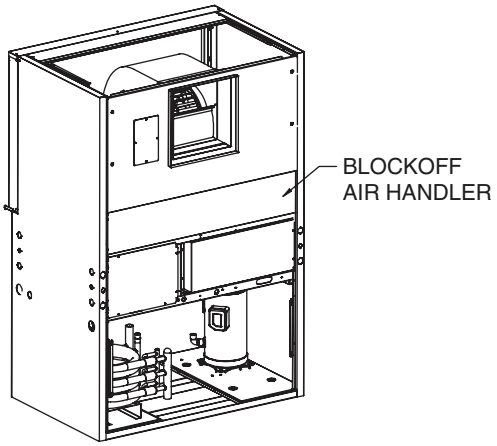

Fig. 15 — Reattach Blockoff Air Handler

13. Put 3 panels back onto unit. See Fig. 16.

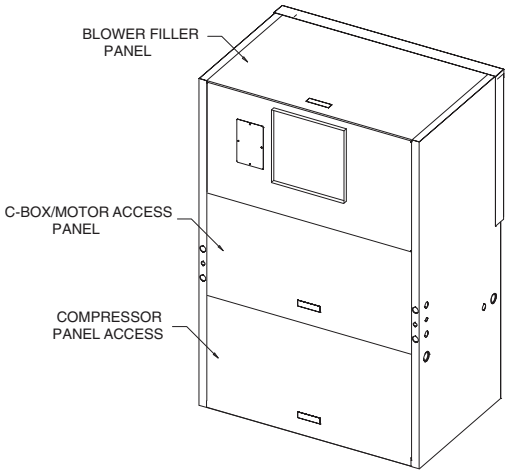

Fig. 16 — Replace Panels

Sound minimization is achieved by enclosing the unit within a small mechanical room or a closet. The following are additional measures for sound control.

1. Mount the unit so that the return-air inlet is 90 degrees to the return-air grille. Install a sound baffle to reduce line-of-sight sound transmitted through return-air grilles.
2. Mount the unit on a rubber or neoprene pad to minimize vibration transmission to the building structure. Extend the pad beyond all four edges of the unit.

NOTE: Some codes require the use of a secondary drain pan under vertical units. Check local codes for more information.

CONTROL BOX/MOTOR ACCESS CONFIGURATION CONVERSION — To change the configuration of the control box/motor access from the front of the unit to the back of the unit, follow the procedure below. To change the configuration of the control box/motor access from the back of the unit to the front of the unit, reverse the procedure below.

1. Remove the 3 panels as shown in Fig. 17.

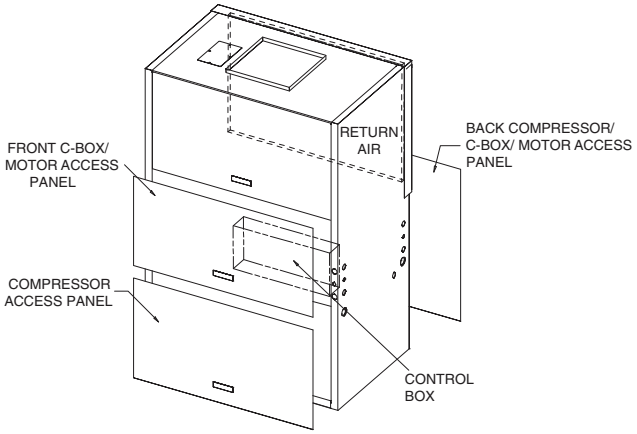

Fig. 17 — Remove Access Panels

2. Remove motor cover and control box cover as shown in Fig. 18.

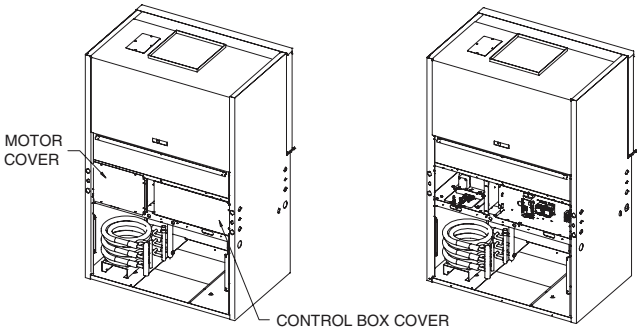

Fig. 18 — Remove Motor and Control Box Covers

3. Remove 4 screws from control box. Using the guide rails as a guide, flip the control box down, slide the box across, and then flip the box up as shown in Fig. 19. Reattach the control box with screws.

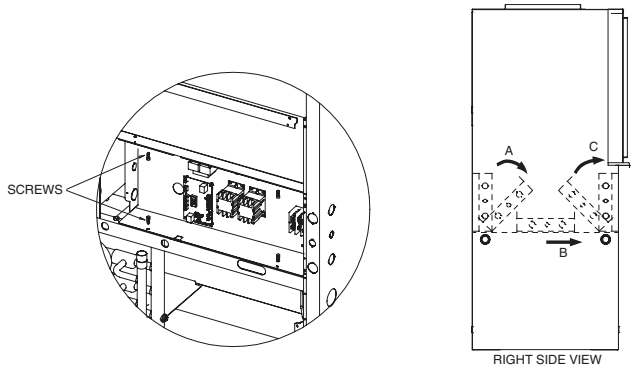

Fig. 19 — Flip Control Box

4. Loosen belt tension and take belt off. See Fig. 20.
5. Remove bolt-belt adjustment assembly. See Fig. 20.

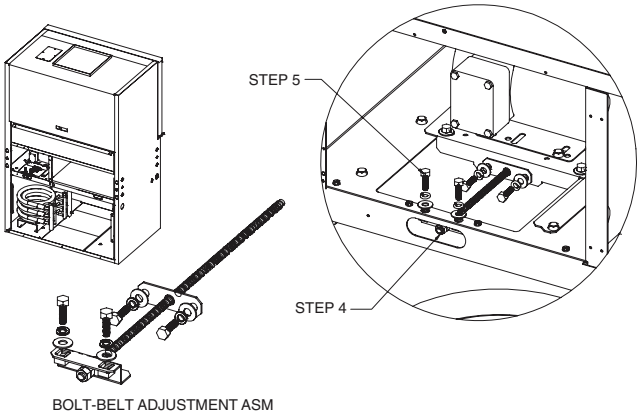

Fig. 20 — Remove Belt and Bolt-Belt Adjustment Assembly

6. Move bolt-belt adjustment assembly to opposite side and reattach. See Fig. 21.

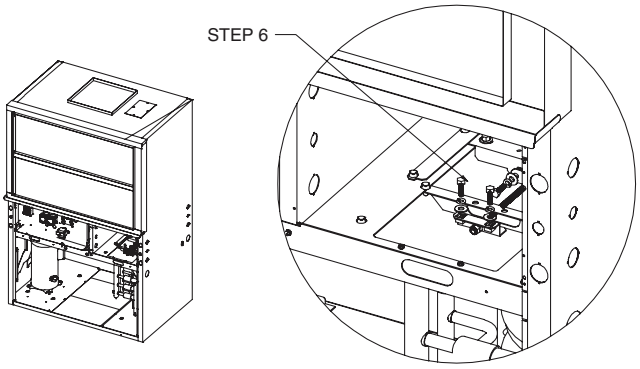

Fig. 21 — Move Bolt-Belt Adjustment Assembly

7. Put belt back on and tighten. Put control box cover and motor cover on return side. See Fig. 22.

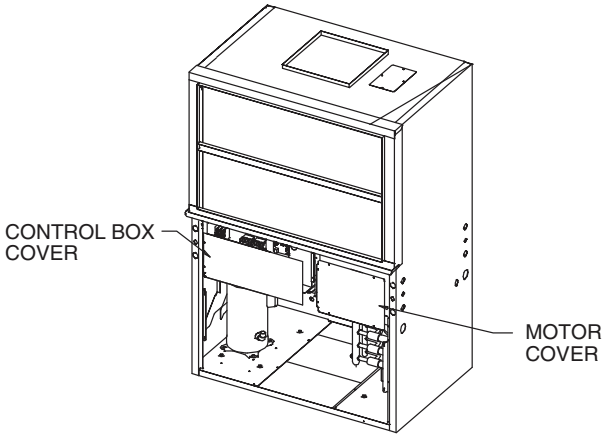

Fig. 22 — Replace Belt and Motor and Control Box Covers

8. Put 3 panels back onto unit. See Fig. 23.

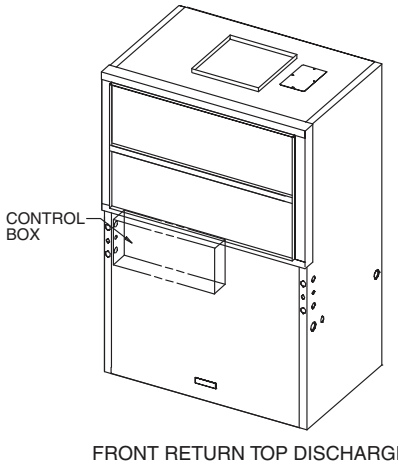

Fig. 23 — Replace Access Panels

Step 5 — Check Duct System — The duct system should be sized to handle the design airflow quietly.

NOTE: Depending on the unit, the fan wheel may have a shipping support installed at the factory. This must be removed before operating unit.

SOUND ATTENUATION — To eliminate the transfer of vibration to the duct system, a flexible connector is recommended for both discharge and return air duct connections on metal duct systems. The supply and return plenums should include internal duct liner of fiberglass or be made of duct board construction to maximize sound attenuation of the blower. Installing the WSHP unit to uninsulated ductwork in an unconditioned space is not recommended since it will sweat and adversely affect the unit's performance.

To reduce air noise, at least one 90-degree elbow could be included in the supply and return air ducts, provided system performance is not adversely impacted. The blower speed can be also changed in the field to reduce air noise or excessive airflow, provided system performance is not adversely impacted.

EXISTING DUCT SYSTEM — If the unit is connected to existing ductwork, consider the following:

- Verify that the existing ducts have the proper capacity to handle the unit airflow. If the ductwork is too small, larger ductwork should be installed.
- Check existing ductwork for leaks and repair as necessary.

NOTE: Local codes may require ventilation air to enter the space for proper indoor air quality. Hard-duct ventilation may be required for the ventilating air supply. If hard ducted ventilation is not required, be sure that a proper air path is provided for ventilation air to unit to meet ventilation requirement of the space.

Step 6 — Install Condensate Drain — The condensate drain can be connected to either side of the unit. The 50VQP units come with a flex hose and 1 in. (25 m) FPT condensate connection tied inside. To install the condensate drain (see Fig. 24.):

1. Untie the flex hose and make interal trap on either the left side or right side of the unit.
2. Internally attach mounting plate with FPT fitting.

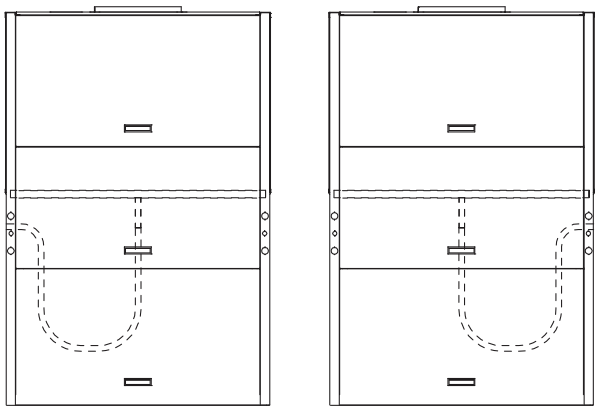

Fig. 24 — Install Condensate Drain

Each unit must be installed with its own individual trap, vent and means to flush or blow out the condensate drain line. Do not install units with a common trap or vent. See Fig. 25.

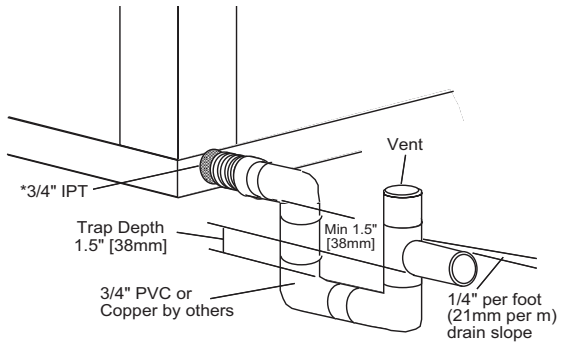

NOTE: Trap should be deep enough to offset maximum unit static difference.

Fig. 25 — Trap Condensate Drain

Consider the following:

- Units are typically installed directly above each other on successive floors with condensate drains located near the units.
- Connect the unit condensate drain connection to the building condensate drain with a 1-in. (25 mm) drain line.
- The horizontal run of a condensate hose is usually too short to cause drainage problems, however the horizontal run pitch of the condensate line should be at least 1 cm for every 50 cm of run in the direction of flow. Avoid low points and unpitched piping since dirt collects in low or level areas and may cause stoppage and overflow.
- Install a condensate trap at each unit with the top of the trap positioned below the unit condensate drain connection.
- Design the length of the trap (water-seal) based upon the amount of positive or negative pressure on the drain pan. As a rule, 25 mm of trap is required for each 10 Pa of negative pressure on the unit.

VENTING — A vent should be installed in the condensate line of any application which may allow dirt or air to collect in the line. Consider the following:

- Always install a vent where an application requires a long horizontal run.
- Always install a vent where large units are working against higher external static pressure and to allow proper drainage for multiple units connected to the same condensate main.
- Be sure to support the line where anticipated sagging from the condensate or when "double trapping" may occur.
- If condensate pump is present on unit, be sure drain connections have a check valve to prevent back flow of condensate into other units.

Step 7 — Pipe Connections — Depending on the application, there are 3 types of WSHP piping systems to choose from: water loop, ground-water and ground loop. Refer to the Carrier System Design Manual for additional information.

All WSHP units utilize low temperature soldered female pipe thread fittings for water connections to prevent annealing and out-of-round leak problems which are typically associated with high temperature brazed connections. Refer to Table 1 for connection sizes. When making piping connections, consider the following:

- A backup wrench must be used when making screw connections to unit to prevent internal damage to piping.
- Insulation may be required on piping to avoid condensation in the case where fluid in loop piping operates at temperatures below dew point of adjacent air.
- Piping systems that contain steel pipes or fittings may be subject to galvanic corrosion. Dielectric fittings may be used to isolate the steel parts of the system to avoid galvanic corrosion.

WATER LOOP APPLICATIONS — Water loop applications usually include a number of units plumbed to a common piping system. Maintenance to any of these units can introduce air into the piping system. Therefore, air elimination equipment comprises a major portion of the mechanical room plumbing.

The flow rate is usually set between 2.41 and 3.23 L/m per kW of cooling capacity. For proper maintenance and servicing, pressure-temperature (P/T) ports are necessary for temperature and flow verification.

In addition to complying with any applicable codes, consider the following for system piping:

- Piping systems utilizing water temperatures below 10.0 C require 13 mm closed cell insulation on all piping surfaces to eliminate condensation.
- All plastic to metal threaded fittings should be avoided due to the potential to leak. Use a flange fitted substitute.
- Teflon tape thread sealant is recommended to minimize internal fouling of the heat exchanger.
- Use backup wrench. Do not overtighten connections.
- Route piping to avoid service access areas to unit.
- The piping system should be flushed prior to operation to remove dirt and foreign materials from the system.

GROUND-LOOP APPLICATIONS — Temperatures between –3.9 and 43.3 C and a cooling capacity of 2.41 to 3.23 L/s per kW are recommended. In addition to complying with any applicable codes, consider the following for system piping:

- Piping materials should be limited to only polyethylene fusion in the buried sections of the loop.
- Galvanized or steel fittings should not be used at any time due to corrosion.
- All plastic to metal threaded fittings should be avoided due to the potential to leak. Use a flange fitted substitute.
- Do not overtighten connections.
- Route piping to avoid service access areas to unit.
- Pressure-temperature (P/T) plugs should be used to measure flow of pressure drop.

GROUND-WATER APPLICATIONS — Typical groundwater piping is shown in Fig. 26. In addition to complying with any applicable codes, consider the following for system piping:

- Install shut-off valves for servicing.
- Install pressure-temperature plugs to measure flow and temperature.

- Boiler drains and other valves should be connected using a "T" connector to allow acid flushing for the heat exchanger.
- Do not overtighten connections.
- Route piping to avoid service access areas to unit.
- Use PVC SCH80 or copper piping material.

NOTE: PVC SCH40 should *not* be used due to system high pressure and temperature extremes.

Water Supply and Quantity — Check water supply. Water supply should be plentiful and of good quality. See Table 2 for water quality guidelines.

> IMPORTANT: Failure to comply with the above required water quality and quantity limitations and the closed-system application design requirements may cause damage to the tube-in-tube heat exchanger that is not the responsibility of the manufacturer.

In all applications, the quality of the water circulated through the heat exchanger must fall within the ranges listed in the Water Quality Guidelines table. Consult a local water treatment firm, independent testing facility, or local water authority for specific recommendations to maintain water quality within the published limits.

Step 8 — Field Power Supply Wiring

⚠ WARNING

To avoid possible injury or death due to electrical shock, open the power supply disconnect switch and secure it in an open position during installation.

⚠ CAUTION

Use only copper conductors for field-installed electrical wiring. Unit terminals are not designed to accept other types of conductors.

All field-installed wiring, including the electrical ground, MUST comply with the National Electrical Code (NEC) as well as applicable local codes. In addition, all field wiring must conform to the Class II temperature limitations described in the NEC.

Refer to unit wiring diagrams Fig. 27-30 for a schematic of the field connections which must be made by the installing (or electrical) contractor. See Tables 3 and 4 for fuses sizes.

Consult the unit wiring diagram located on the inside of the compressor access panel to ensure proper electrical hookup. The installing (or electrical) contractor must make the field connections when using field-supplied disconnect.

Operating voltage must be the same voltage and phase as shown in electrical data shown in Tables 3 and 4.

Make all final electrical connections with a length of flexible conduit to minimize vibration and sound transmission to the building.

POWER CONNECTION — Line voltage connection is made by connecting the incoming line voltage wires to the L side of the CC terminal. See Tables 3 and 4 for correct wire and maximum overcurrent protection sizing.

SUPPLY VOLTAGE — Operating voltage to unit must be within voltage range indicated on unit nameplate.

On 3-phase units, voltages under load between phases must be balanced within 2%. Use the following formula to determine the percentage voltage imbalance:

% Voltage Imbalance

$$= 100 \times \frac{\text{max voltage deviation from average voltage}}{\text{average voltage}}$$

Example: Supply voltage is 420-3-50.

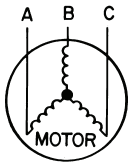

AB = 425 volts
BC = 422 volts
AC = 417 volts

$$\text{Average Voltage} = \frac{425 + 422 + 417}{3} = \frac{1264}{3} = 421$$

Determine maximum deviation from average voltage:

(AB) 425 – 421 = 4 v
(BC) 422 – 421 = 1 v
(AC) 421 – 418 = 3 v

Maximum deviation is 4 v.

Determine percent voltage imbalance.

$$\text{\% Voltage Imbalance} = 100 \times \frac{4}{421} = 0.95\%$$

This amount of phase imbalance is satisfactory as it is below the maximum allowable 2%.

Operation on improper line voltage or excessive phase imbalance constitutes abuse and may cause damage to electrical components.

NOTE: If more than 2% voltage imbalance is present, contact local electric utility.

420-VOLT OPERATION — All 380/420 volt units are factory wired for 380 volts. The transformers may be switched to 420-volt operation (as illustrated on the wiring diagram) by disconnecting the VIO lead at L1 and attaching the BRN lead to L1. Close open end of VIO lead.

Table 2 — Water Quality Guidelines

CONDITION	HX MATERIAL*	CLOSED RECIRCULATING†	OPEN LOOP AND RECIRCULATING WELL**		
Scaling Potential — Primary Measurement Above the given limits, scaling is likely to occur. Scaling indexes should be calculated using the limits below.					
pH/Calcium Hardness Method	All	N/A	**pH < 7.5 and Ca Hardness, <100 ppm**		
Index Limits for Probable Scaling Situations (Operation outside these limits is not recommended.)					
Scaling indexes should be calculated at 150 F for direct use and HWG applications, and at 90 F for indirect HX use. A monitoring plan should be implemented.					
Ryznar Stability Index	All	N/A	**6.0 - 7.5** If >7.5 minimize steel pipe use.		
Langelier Saturation Index	All	N/A	**–0.5 to +0.5** If <–0.5 minimize steel pipe use. Based upon 150 F HWG and direct well, 85 F indirect well HX.		
Iron Fouling					
Iron Fe^{2+} (Ferrous) (Bacterial Iron Potential)	All	N/A	**<0.2 ppm (Ferrous)** If Fe^{2+} (ferrous) >0.2 ppm with pH 6 - 8, O_2<5 ppm check for iron bacteria.		
Iron Fouling	All	N/A	**<0.5 ppm of Oxygen** Above this level deposition will occur.		
Corrosion Prevention††					
pH	All	6 - 8.5 Monitor/treat as needed.	**6 - 8.5** Minimize steel pipe below 7 and no open tanks with pH <8.		
Hydrogen Sulfide (H_2S)	All	N/A	**<0.5 ppm** At H_2S>0.2 ppm, avoid use of copper and cupronickel piping or HXs. Rotten egg smell appears at 0.5 ppm level. Copper alloy (bronze or brass) cast components are okay to <0.5 ppm.		
Ammonia Ion as Hydroxide, Chloride, Nitrate and Sulfate Compounds	All	N/A	**<0.5 ppm**		
Maximum Chloride Levels			Maximum allowable at maximum water temperature.		
			50 F (10 C)	75 F (24 C)	100 F (38 C)
	Copper	N/A	<20 ppm	NR	NR
	Cupronickel	N/A	<150 ppm	NR	NR
	304 SS	N/A	<400 ppm	<250 ppm	<150 ppm
	316 SS	N/A	<1000 ppm	<550 ppm	<375 ppm
	Titanium	N/A	>1000 ppm	>550 ppm	>375 ppm
Erosion and Clogging					
Particulate Size and Erosion	All	<10 ppm of particles and a maximum velocity of 6 fps. Filtered for maximum 800 micron size.	<10 ppm (<1 ppm "sandfree" for reinjection) of particles and a maximum velocity of 6 fps. Filtered for maximum 800 micron size. Any particulate that is not removed can potentially clog components.		
Brackish	All	N/A	Use cupronickel heat exchanger when concentrations of calcium or sodium chloride are greater than 125 ppm are present. (Seawater is approximately 25,000 ppm.)		

LEGEND

HWG — Hot Water Generator
HX — Heat Exchanger
N/A — Design Limits Not Applicable Considering Recirculating Potable Water
NR — Application Not Recommended
SS — Stainless Steel

*Heat exchanger materials considered are copper, cupronickel, 304 SS (stainless steel), 316 SS, titanium.
†Closed recirculating system is identified by a closed pressurized piping system.
**Recirculating open wells should observe the open recirculating design considerations.

††If the concentration of these corrosives exceeds the maximum allowable level, then the potential for serious corrosion problems exists.
Sulfides in the water quickly oxidize when exposed to air, requiring that no agitation occur as the sample is taken. Unless tested immediately at the site, the sample will require stabilization with a few drops of one Molar zinc acetate solution, allowing accurate sulfide determination up to 24 hours after sampling. A low pH and high alkalinity cause system problems, even when both values are within ranges shown. The term pH refers to the acidity, basicity, or neutrality of the water supply. Below 7.0, the water is considered to be acidic. Above 7.0, water is considered to be basic. Neutral water contains a pH of 7.0.
NOTE: To convert ppm to grains per gallon, divide by 17. Hardness in mg/l is equivalent to ppm.

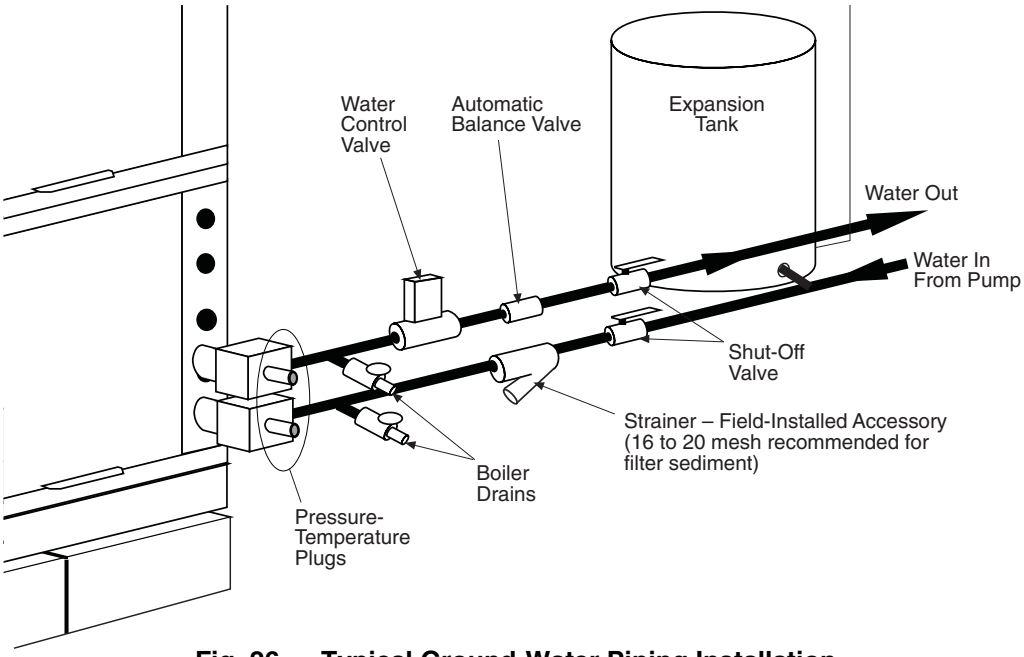

Fig. 26 — Typical Ground-Water Piping Installation

LEGEND

AL — Alarm Relay
BC — Blower Contactor
CB — Circuit Breaker
CC — Compressor Contactor
CO — Sensor, Condensate Overflow
DPP — Dual Point Power
DS — Disconnect Switch
FP1 — Sensor, Water Coil Freeze Protection
FP2 — Sensor, Air Coil Freeze Protection
HP — High-Pressure Switch
HPWS — High-Pressure Water Switch
JW3 — Clippable Field Selection Jumper
LOC — Loss of Charge Pressure Switch
MV — Motorized Valve
PDB1 — Power Distribution Block
PDB2 — Power Distribution Block Dual Point Option
RVS — Reversing Valve Solenoid
TRANS — Transformer
Factory Line Voltage Wiring
Factory Low Voltage Wiring
Field Line Voltage Wiring
Field Low Voltage Wiring
Printed Circuit Trace
Optional Wiring

Relay/Contactor Coil
Thermistor
Condensate Pan
Circuit Breaker
Ground
Solenoid Coil
Relay Contacts - N.O.
Relay Contacts - N.C.
Temperature Switch
Switch - Low Pressure
Switch - High Pressure
Wire Nut

NOTES:
1. Compressor and blower motor thermally protected internally.
2. All wiring to the unit must comply with NEC (National Electrical Code, U.S.A.) and local codes.
3. 380/420-v transformers will be connected for 380-v operation. For 420-v operation, disconnect VIO lead at L1, and attach BRN lead to L1. Close open end of VIO lead.
4. FPI jumper provides low temperature protection for WATER. When using ANTIFREEZE solutions, cut JW3 jumper.
5. Typical heat pump thermostat wiring shown. Refer to thermostat installation instructions for wiring to the unit. Thermostat wiring must be “Class 1” and voltage rating equal to or greater than unit supply voltage.
6. 24-v alarm signal shown. For dry alarm contact, cut JW1 jumper and dry contact will be available between AL1 and AL2.
7. Transformer secondary ground via Complete C board standoffs and screws to control box. (Ground available from top two standoffs as shown.)
8. For dual point power option, blower wires (3 qty) will go to PDB2 only.

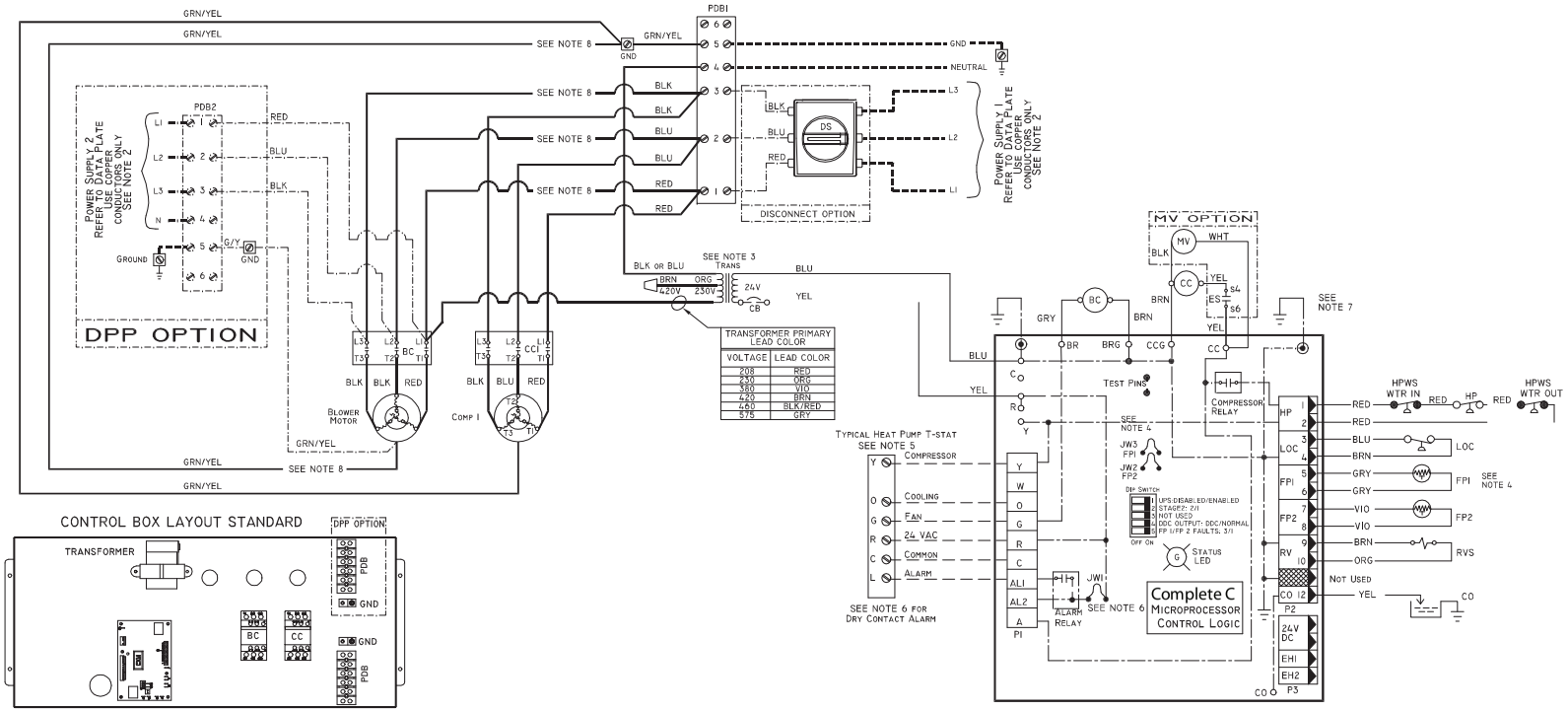

Fig. 27 — 50VQP084-168 Unit with Complete C Control (Typical)

LEGEND

AL — Alarm Relay
BC — Blower Contactor
CB — Circuit Breaker
CC — Compressor Contactor
CO — Sensor, Condensate Overflow
DPP — Dual Point Power
DS — Disconnect Switch
FP1 — Sensor, Water Coil Freeze Protection
FP2 — Sensor, Air Coil Freeze Protection
HP — High-Pressure Switch
HPWS — High-Pressure Water Switch
JW3 — Clippable Field Selection Jumper
LOC — Loss of Charge Pressure Switch
MV — Motorized Valve
PDB — Power Distribution Block
PDB2 — Power Distribution Block Dual Point Option
RVS — Reversing Valve Solenoid
TRANS — Transformer
Factory Line Voltage Wiring
Factory Low Voltage Wiring
Field Line Voltage Wiring
Field Low Voltage Wiring
Printed Circuit Trace
Optional Wiring

Relay/Contactor Coil
Thermistor
Condensate Pan
Circuit Breaker
Ground
Solenoid Coil
Relay Contacts - N.O.
Relay Contacts - N.C.
Temperature Switch
Switch - Low Pressure
Switch - High Pressure
Wire Nut

NOTES:
1. Compressor and blower motor thermally protected internally.
2. All wiring to the unit must comply with NEC (National Electrical Code) and local codes.
3. 380/420-v transformers will be connected for 380-v operation. For 420-v operation, disconnect VIO lead at L1, and attach BRN lead to L1. Close open end of VIO lead.
4. FP1 thermistor provides freeze protection for WATER. When using ANTIFREEZE solution, cut JW3 jumper.
5. Typical heat pump thermostat wiring shown. Refer to thermostat installation instructions for wiring to the unit. Thermostat wiring must be “Class 1” and voltage rating equal to or greater than unit supply voltage.
6. 24-v alarm signal shown. For dry alarm contact, cut AL2 DRY (JW4) jumper and dry contact will be available between AL1 and AL2.
7. Transformer secondary ground via Deluxe D board standoffs and screws to control box. (Ground available from top two standoffs as shown.)
8. For dual point power option, blower wires (3 qty) will go to PDB2 only.

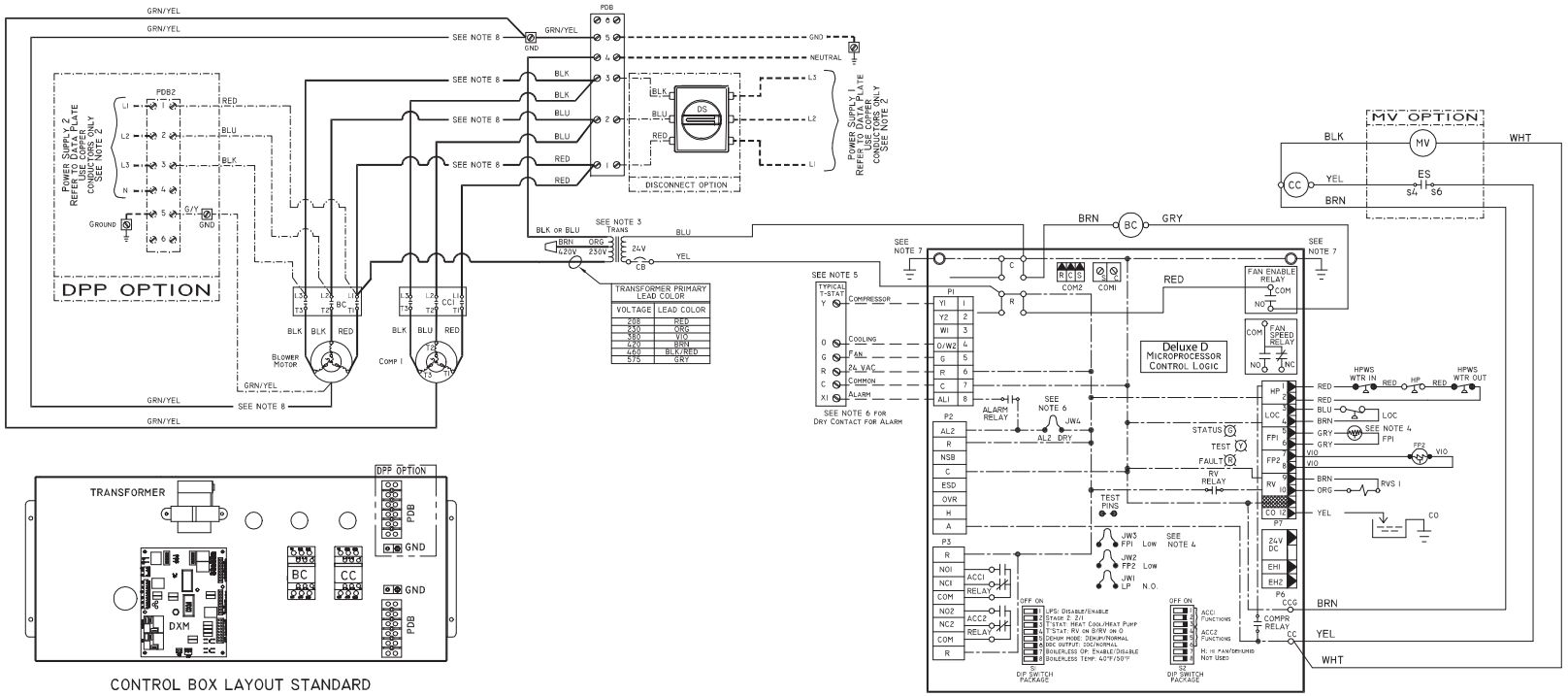

Fig. 28 — 50VQP084-168 with Deluxe D Control (Typical)

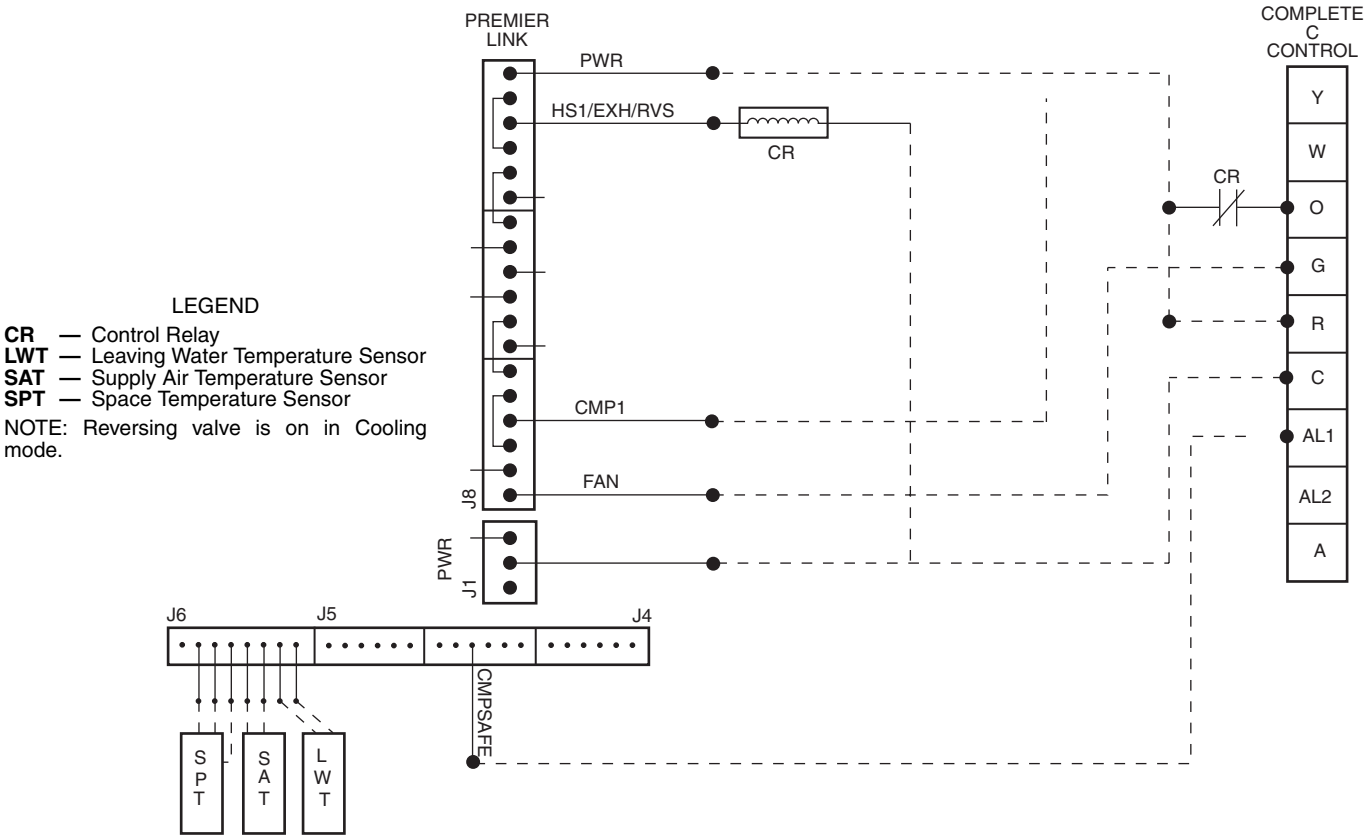

Fig. 29 — PremierLink™ Controller Applications with Complete C Control

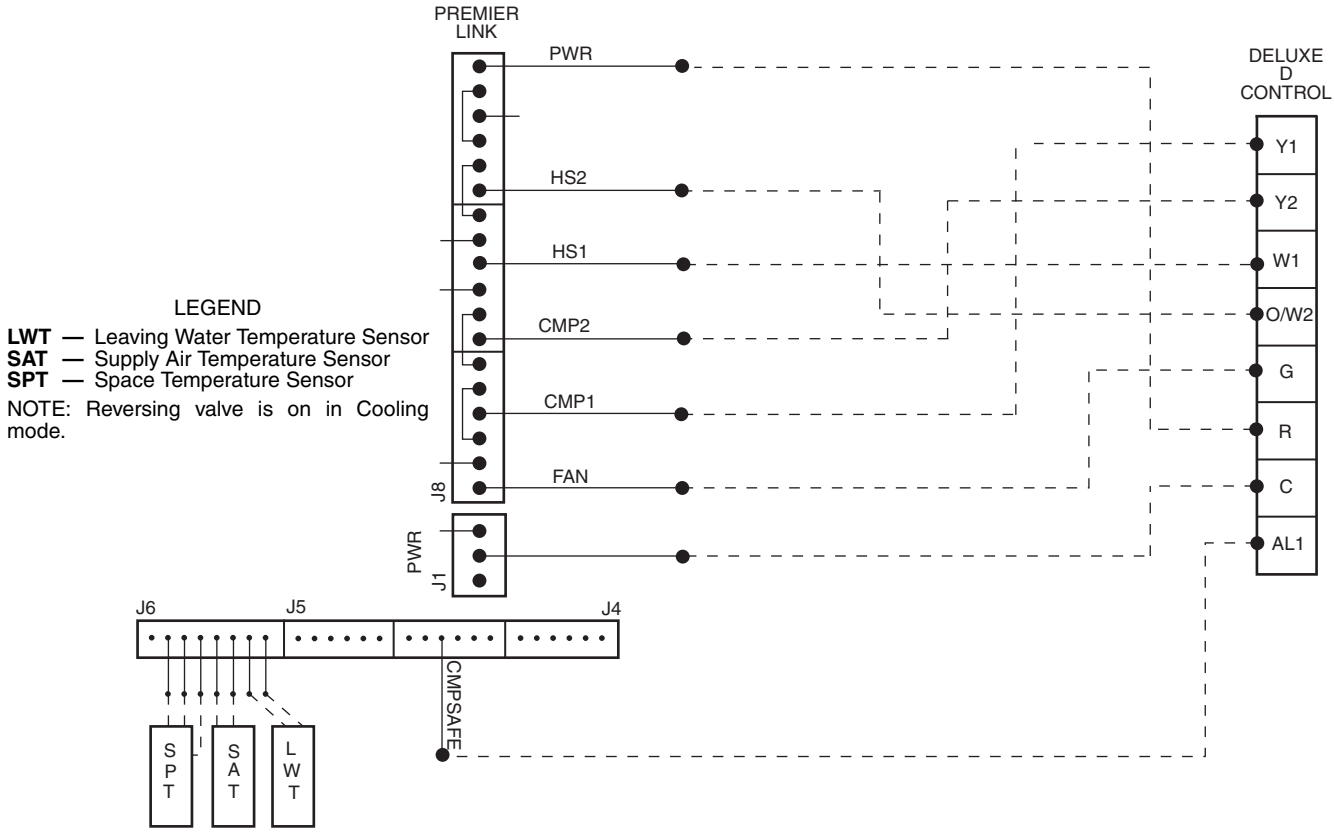

Fig. 30 — PremierLink Controller Applications with Deluxe D Control

Table 3 — 50VQP Unit Electrical Data — Standard Unit

50VQP UNIT SIZE	VOLTAGE (V-Ph-Hz)	MIN/MAX VOLTAGE	BLOWER OPTION	COMPRESSOR			FAN MOTOR FLA	TOTAL UNIT FLA	MCA	MAX FUSE/ HACR
				qty	RLA	LRA				
084	380/420-3-50	360/440	A,B,C	1	11.2	75.0	1.8	13.0	15.8	25
			E	1	11.2	75.0	2.5	13.7	16.5	25
096	380/420-3-50	360/440	A,B,C	1	12.2	101.0	2.5	14.7	17.8	25
120	380/420-3-50	360/440	A,B,C	1	16.7	111.0	3.6	20.3	24.5	40
			E	1	16.7	111.0	4.9	21.6	25.8	40
150	380/420-3-50	360/440	A,B,C	1	18.6	118.0	4.9	23.5	28.2	45
			E	1	18.6	118.0	7.8	26.4	31.1	45
168	380/420-3-50	360/440	A,B,C	2	11.2	75.0	3.4	25.8	28.6	35
192	380/420-3-50	360/440	A,B,C	2	12.2	101.0	4.9	29.3	32.3	40
240	380/420-3-50	360/440	A,B,C	2	16.7	111.0	7.8	41.2	45.4	60
300	380/420-3-50	360/440	A,B,C	2	18.6	118.0	7.8	45.0	49.7	60
			E	2	18.6	118.0	12.2	49.4	54.0	70

LEGEND

FLA — Full Load Amps
HACR — Heating, Air Conditioning, and Refrigeration
LRA — Locked Rotor Amps
MCA — Minimum Circuit Amps
RLA — Rated Load Amps

NOTES:
1. HACR circuit breaker in U.S.A. only.
2. All fuses Class RK-5.

Table 4 — 50VQP Unit Electrical Data — Dual Point Power Unit

50VQP UNIT SIZE	VOLTAGE (V-Ph-Hz)	MIN/MAX VOLTAGE	BLOWER OPTION	COMPRESSOR						EMERGENCY POWER SUPPLY		
				qty	RLA	LRA	TOTAL COMP FLA	COMP MCA	COMP MAX FUSE	FAN MOTOR FLA	FAN MCA	FAN MAX FUSE
084	380/420-3-50	360/440	A,B,C	1	11.2	75.0	11.2	14.0	25	1.8	2.3	15
			E	1	11.2	75.0	11.2	14.0	25	2.5	3.1	15
096	380/420-3-50	360/440	A,B,C	1	12.2	101.0	12.2	15.3	25	2.5	3.1	15
120	380/420-3-50	360/440	A,B,C	1	16.7	111.0	16.7	20.9	35	3.6	4.5	15
			E	1	16.7	111.0	16.7	20.9	35	4.9	6.1	15
150	380/420-3-50	360/440	A,B,C	1	18.6	118.0	18.6	23.3	40	4.9	6.1	15
			E	1	18.6	118.0	18.6	23.3	40	7.8	9.8	15
168	380/420-3-50	360/440	A,B,C	2	11.2	75.0	22.4	25.2	35	3.4	4.3	15
192	380/420-3-50	360/440	A,B,C	2	12.2	101.0	24.4	27.4	35	4.9	6.1	15
240	380/420-3-50	360/440	A,B,C	2	16.7	111.0	33.4	37.6	50	7.8	9.8	15
300	380/420-3-50	360/440	A,B,C	2	18.6	118.0	37.2	41.9	60	7.8	9.8	15
			E	2	18.6	118.0	37.2	41.9	60	12.2	15.3	25

LEGEND

FLA — Full Load Amps
HACR — Heating, Air Conditioning, and Refrigeration
LRA — Locked Rotor Amps
MCA — Minimum Circuit Amps
RLA — Rated Load Amps

NOTES:
1. HACR circuit breaker in U.S.A. only.
2. All fuses Class RK-5.

Step 9 — Field Control Wiring

THERMOSTAT CONNECTIONS — The thermostat should be wired directly to the Aquazone™ control board. See Fig. 27-31.

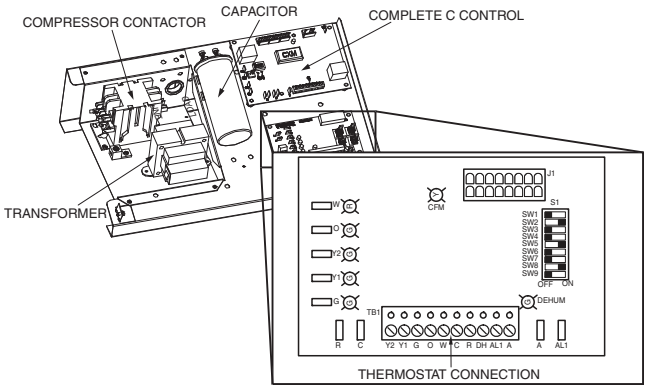

NOTE: Low voltage connector may be removed for easy installation.

Fig. 31 — Low Voltage Field Wiring

WATER FREEZE PROTECTION — The Aquazone control allows the field selection of source fluid freeze protection points through jumpers. The factory setting of jumper JW3 (FP1) is set for water at –1.1 C. In earth loop applications, jumper JW3 should be clipped to change the setting to –12.2 C when using antifreeze in colder earth loop applications. See Fig. 32.

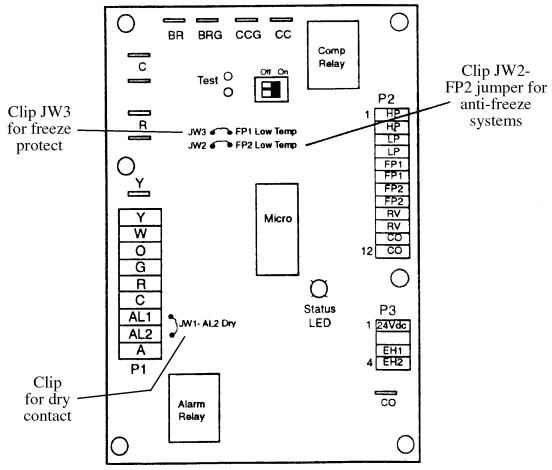

AQUAZONE CONTROL (Complete C Control Shown)

Fig. 32 — Typical Aquazone™ Control Board Jumper Locations

AIR COIL FREEZE PROTECTION — The air coil freeze protection jumper JW2 (FP2) is factory set for –1.1 C and should not need adjusting.

ACCESSORY CONNECTIONS — Terminal labeled A on the control is provided to control accessory devices such as water valves, electronic air cleaners, humidifiers, etc. This signal operates with the compressor terminal. See Fig. 33. Refer to the specific unit wiring schematic for details.

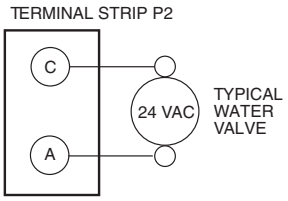

Fig. 33 — Typical Aquazone Accessory Wiring (Control D Shown)

NOTE: The A terminal should *only* be used with 24 volt signals — not line voltage signals.

WATER SOLENOID VALVES — An external solenoid valve(s) should be used on ground water installations to shut off flow to the unit when the compressor is not operating. A slow closing valve may be required to help reduce water hammer. Figure 33 shows typical wiring for a 24-vac external solenoid valve. Figures 34 and 35 illustrate typical slow closing water control valve wiring for Taco 500 Series and Taco ESP Series valves. Slow closing valves take approximately 60 sec. to open (very little water will flow before 45 sec.). Once fully open, an end switch allows the compressor to be energized (only on valves with end switches). Only relay or triac based electronic thermostats should be used with slow closing valves. When wired as shown, the slow closing valve will operate properly with the following notations:

1. The valve will remain open during a unit lockout.
2. The valve will draw approximately 25 to 35 VA through the "Y" signal of the thermostat.

IMPORTANT: Connecting a water solenoid valve can overheat the anticipators of electromechanical thermostats. Only use relay based electronic thermostats.

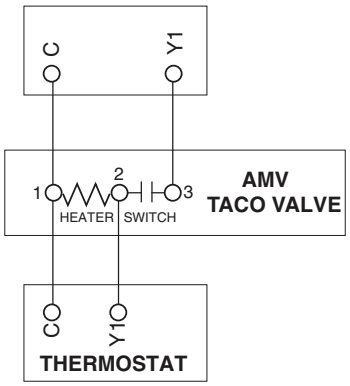

Fig. 34 — AMV Valve Wiring

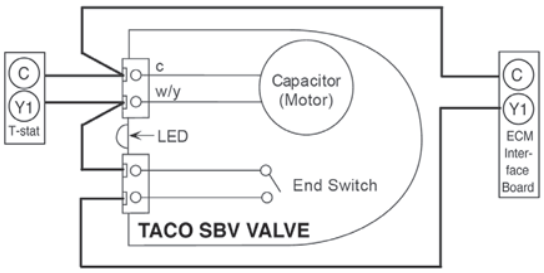

Fig. 35 — Taco SBV Valve Wiring

PRE-START-UP

System Checkout — When the installation is complete, follow the system checkout procedure outlined below before starting up the system. Be sure:

1. Voltage is within the utilization range specifications of the unit compressor and fan motor and voltage is balanced for 3-phase units.
2. Fuses, breakers and wire are correct size.
3. Low voltage wiring is complete.
4. Piping and system flushing is complete.
5. Air is purged from closed loop system.
6. System is balanced as required. Monitor if necessary.
7. Isolation valves are open.
8. Water control valves or loop pumps are wired.

9. Condensate line is open and correctly pitched.
10. Transformer switched to lower voltage tap if necessary.
11. Blower rotates freely — shipping support is removed.
12. Blower speed is on correct setting.
13. Air filter is clean and in position.
14. Service/access panels are in place.
15. Return-air temperature is 4.4 to 26.7 C for heating and 10.0 to 43.3 C for cooling.
16. Air coil is clean.
17. Control field-selected settings are correct.

AIR COIL — To obtain maximum performance, the air coil should be cleaned before starting the unit. A 10% solution of dishwasher detergent and water is recommended for both sides of the coil. Rinse thoroughly with water.

Airflow and External Static Pressure — The 50VQP units are available with standard, low, and high-static factory-installed options. These options will substitute a different blower drive sheave for each static range. In addition, certain static ranges may require the optional large fan motor.

SHEAVE ADJUSTMENT — The 50VQP units are supplied with a variable sheave drive on the fan motor to adjust for differing airflows at various ESP (external static pressure) conditions. See Tables 5-12 for unit airflows. When fully closed, the sheave will produce the highest static capability (higher rpm). To adjust sheave position, follow the procedure outlined below:

1. Loosen belt tension and remove belt.
2. Loosen set screw on fan motor.
3. Open sheave to desired position.
4. Retighten set screw and replace belt.

NOTE: Set belt tension as outlined below.

BELT TENSION ADJUSTMENT — An overly loose belt will, upon starting motor, produce a slippage "squeal" and cause premature belt failure and or intermittent airflow. An overly tight belt can cause premature motor or blower bearing failure. To adjust the belt tension, follow the procedure outlined below:

1. Remove belt from motor sheave.
2. Lift motor assembly.
3. Loosen the $^{5}/_{16}$-in. hex nuts on the grommet motor adjustment bolts (2 per bolt). To increase the belt tension loosen the top hex nut. To decrease the belt tension loosen the bottom hex nut.
4. Turn the bolts by hand to the desired position then tighten the $^{5}/_{16}$-in. hex nuts (2 per bolt).
5. Lower the motor assembly.
6. Install the belt.
7. The belt tension can be adjusted by using one of the following methods:
   a. Tighten until belt deflects approximately 13 mm with very firm finger pressure.
   b. Grasp belt midway between two pulleys and twist for a 90-degree rotation.
      NOTE: Adjusting less than 90 degrees will overtighten the belt and adjusting more than 90 degrees will loosen belt.
   c. Set proper belt tension to 32 to 36 kg.

NOTE: The motor position should not need adjustment. Motor sheave position is at mid position of each sheave. For example, the motor sheave is 2.5 turns open on a 5-turn sheave. The belt tension adjustment can also be accomplished by turning the $^{5}/_{16}$-in. hex nuts to the desired position.

NOTE: Available airflows for all units are shown in Tables 5-12.

Table 5 — 50VQP084 Blower Performance Data

AIRFLOW (l/s)		EXTERNAL STATIC PRESSURE (Pa)															
		0	25	50	75	100	125	150	175	200	225	250	275	300	325	350	375
755.2	BkW	—	—	0.12	0.15	0.13	0.19	0.22	0.24	0.26	0.30	0.31	0.33	0.37	0.39	—	—
	Sheave/Mtr	—	—	B	B	A	A	A	A	C	C	C	C	C	C	—	—
	RPM	—	—	388	437	482	527	564	599	630	663	690	716	744	767	—	—
	Turns Open	—	—	3.5	1.5	5	3.5	2.5	1.5	5.5	4.5	3.5	2.5	2	1	—	—
802.4	BkW	—	—	0.13	0.16	0.15	0.20	0.24	0.25	0.28	0.32	0.34	0.36	0.40	0.42	—	—
	Sheave/Mtr	—	—	B	B	A	A	A	A	C	C	C	C	C	C	—	—
	RPM	—	—	392	440	485	529	566	601	633	666	693	720	747	771	—	—
	Turns Open	—	—	3	1.5	5	3.5	2	1.5	5.5	4.5	3	2.5	2	1	—	—
849.6	BkW	—	—	0.14	0.17	0.17	0.22	0.25	0.27	0.29	0.33	0.36	0.38	0.42	—	—	—
	Sheave/Mtr	—	—	B	B	A	A	A	A	C	C	C	C	C	—	—	—
	RPM	—	—	395	444	488	530	568	603	636	668	697	723	751	—	—	—
	Turns Open	—	—	2.5	1	5	3.5	2	1	5	4	3	2	1.5	—	—	—
896.8	BkW	—	—	0.15	0.18	0.19	0.23	0.27	0.28	0.31	0.35	0.38	0.41	0.45	—	—	—
	Sheave/Mtr	—	—	B	B	A	A	A	C	C	C	C	C	C	—	—	—
	RPM	—	—	399	447	491	532	571	606	639	671	700	727	754	—	—	—
	Turns Open	—	—	2.5	1	4.5	3	2	5.5	5	4	3	2	1.5	—	—	—
944.0	BkW	—	0.11	0.16	0.19	0.21	0.25	0.28	0.30	0.33	0.37	0.40	0.43	0.47	—	—	—
	Sheave/Mtr	—	B	B	A	A	A	A	C	C	C	C	C	C	—	—	—
	RPM	—	352	403	450	493	534	573	608	641	673	703	730	757	—	—	—
	Turns Open	—	4.5	2.5	5.5	4.5	3	2	5.5	4.5	4	2.5	2	1.5	—	—	—
991.2	BkW	—	0.12	0.18	0.22	0.25	0.28	0.31	0.33	0.37	0.40	0.44	0.48	0.52	—	—	—
	Sheave/Mtr	—	B	B	A	A	A	A	C	C	C	C	C	C	—	—	—
	RPM	—	362	410	457	499	537	577	612	647	678	710	737	764	—	—	—
	Turns Open	—	4.5	2	5.5	4.5	3	1.5	5.5	4.5	3.5	2.5	1.5	1	—	—	—
1038.4	BkW	—	0.17	0.21	0.24	0.25	0.29	0.33	0.37	0.40	0.44	0.48	0.52	0.55	—	—	—
	Sheave/Mtr	—	B	B	A	A	A	A	C	C	C	C	C	C	—	—	—
	RPM	—	375	424	467	507	548	584	621	653	684	716	743	772	—	—	—
	Turns Open	—	4	2	5	4	2.5	1.5	5	4.5	3.5	2.5	1.5	1	—	—	—
1085.6	BkW	—	0.18	0.22	0.25	0.29	0.33	0.37	0.40	0.44	0.48	0.52	0.55	—	—	—	—
	Sheave/Mtr	—	B	B	A	A	A	A	C	C	C	C	C	—	—	—	—
	RPM	—	387	435	476	518	555	590	627	659	692	721	751	—	—	—	—
	Turns Open	—	3.5	1.5	5	4	2.5	1.5	5	4	3	2	1.5	—	—	—	—
1132.8	BkW	0.18	0.22	0.25	0.29	0.33	0.37	0.40	0.44	0.48	0.52	0.55	0.59	—	—	—	—
	Sheave/Mtr	B	B	B	A	A	A	A	C	C	C	C	C	—	—	—	—
	RPM	353	403	446	485	527	563	600	633	665	697	726	756	—	—	—	—
	Turns Open	4..5	3	1.5	4.5	3.5	2.5	1	5	4	3	2	1.5	—	—	—	—
1180.0	BkW	0.21	0.23	0.25	0.29	0.33	0.37	0.40	0.44	0.48	0.55	0.59	0.63	—	—	—	—
	Sheave/Mtr	B	B	B	A	A	A	A	C	C	C	C	C	—	—	—	—
	RPM	362	411	452	495	532	567	604	636	670	700	729	759	—	—	—	—
	Turns Open	4	2.5	1	4.5	3.5	2	1	4.5	4	3	2	1	—	—	—	—
1227.2	BkW	0.22	0.25	0.32	0.36	0.40	0.43	0.47	0.51	0.55	0.58	0.62	0.66	—	—	—	—
	Sheave/Mtr	B	B	A	A	A	A	C	C	C	C	C	C	—	—	—	—
	RPM	377	420	460	500	536	570	606	638	671	701	729	759	—	—	—	—
	Turns Open	3.5	2	5.5	4	3	2	5.5	4.5	3.5	2.5	2	1	—	—	—	—
1274.4	BkW	0.25	0.28	0.32	0.36	0.40	0.44	0.48	0.52	0.55	0.59	0.63	0.67	—	—	—	—
	Sheave/Mtr	B	B	A	A	A	A	C	C	C	C	C	C	—	—	—	—
	RPM	381	423	463	504	539	576	609	641	674	703	734	762	—	—	—	—
	Turns Open	3.5	2	5.5	4	3	1.5	5.5	4.5	3.5	2.5	1.5	1	—	—	—	—
1321.6	BkW	0.25	0.29	0.33	0.37	0.40	0.48	0.52	0.55	0.59	0.63	0.67	0.70	—	—	—	—
	Sheave/Mtr	B	B	A	A	A	A	C	C	C	C	C	C	—	—	—	—
	RPM	390	431	474	510	545	581	613	647	677	706	737	764	—	—	—	—
	Turns Open	3	1.5	5	3.5	2.5	1.5	5.5	4	3.5	2.5	1.5	1	—	—	—	—
1368.8	BkW	0.29	0.33	0.37	0.40	0.44	0.48	0.55	0.59	0.63	0.67	0.70	0.78	—	—	—	—
	Sheave/Mtr	B	B	A	A	A	A	C	C	C	C	C	E	—	—	—	—
	RPM	399	440	481	517	551	586	618	651	681	710	740	767	—	—	—	—
	Turns Open	2.5	1.5	5	3.5	2	1	5	4	3	2	1.5	1	—	—	—	—
1416.0	BkW	0.32	0.37	0.40	0.44	0.48	0.52	0.55	0.63	0.67	0.70	0.78	0.82	—	—	—	—
	Sheave/Mtr	B	B	A	A	A	A	C	C	C	C	E	E	—	—	—	—
	RPM	412	455	492	526	563	595	628	658	687	718	745	774	—	—	—	—
	Turns Open	2.5	1	4.5	3	2	1	5	4	3	2	1.5	1	—	—	—	—

LEGEND

A — Standard rpm/Standard Motor
B — Low rpm/Standard Motor
bhp — Brake Horsepower
C — High rpm/Standard Motor
E — High rpm/Large Motor
ESP — External Static Pressure

NOTES:

1. Unit is factory shipped with standard static sheave and drive at 2.5 turns open. Other speeds require field selection.
2. For applications requiring higher static pressures, contact your local Carrier representative. Performance data does not include drive losses and is based on sea level conditions.
3. All airflow is rated at lowest voltage. If unit is dual voltage rated, data is based on lowest voltage.
4. A = Standard Rpm/Standard Motor, B = Low Rpm/Standard Motor, C = High Rpm/Standard Motor, E = High Rpm/Large Motor.

Table 6 — 50VQP096 Blower Performance Data

AIRFLOW (l/s)		EXTERNAL STATIC PRESSURE (Pa)															
		0	25	50	75	100	125	150	175	200	225	250	275	300	325	350	375
849.6	BkW	—	0.10	0.14	0.17	0.17	0.22	0.25	0.27	0.29	0.33	0.36	0.38	0.42	—	—	—
	Sheave/Mtr	—	B	B	A	A	A	A	A	C	C	C	C	C	—	—	—
	RPM	—	343	395	444	488	530	568	603	636	668	697	723	751	—	—	—
	Turns Open	—	5	3	6	5	3.5	2.5	1.5	5	4	3	2.5	1.5	—	—	—
896.8	BkW	—	0.11	0.15	0.18	0.19	0.23	0.27	0.28	0.31	0.35	0.38	0.41	0.45	—	—	—
	Sheave/Mtr	—	B	B	A	A	A	A	A	C	C	C	C	C	—	—	—
	RPM	—	348	399	447	491	532	571	606	639	671	700	727	754	—	—	—
	Turns Open	—	4.5	3	6	5	3.5	2	1.5	5	4	3	2.5	1.5	—	—	—
944.0	BkW	—	0.11	0.16	0.19	0.21	0.25	0.28	0.30	0.33	0.37	0.40	0.43	0.47	—	—	—
	Sheave/Mtr	—	B	B	A	A	A	A	A	C	C	C	C	C	—	—	—
	RPM	—	352	403	450	493	534	573	608	641	673	703	730	757	—	—	—
	Turns Open	—	4.5	3	5.5	4.5	3	2	1	5	4	2.5	2	1.5	—	—	—
991.2	BkW	—	0.12	0.18	0.22	0.25	0.28	0.31	0.33	0.37	0.40	0.44	0.48	0.52	—	—	—
	Sheave/Mtr	—	B	B	A	A	A	A	A	C	C	C	C	C	—	—	—
	RPM	—	362	410	457	499	537	577	612	647	678	710	737	764	—	—	—
	Turns Open	—	4	2.5	5.5	4.5	3	2	1	4.5	3.5	2.5	2	1	—	—	—
1038.4	BkW	—	0.17	0.21	0.24	0.25	0.29	0.33	0.37	0.40	0.44	0.48	0.52	0.55	—	—	—
	Sheave/Mtr	—	B	B	A	A	A	A	A	C	C	C	C	C	—	—	—
	RPM	—	375	424	467	507	548	584	621	653	684	716	743	772	—	—	—
	Turns Open	—	4	2	5	4.5	3	1.5	1	4.5	3.5	2.5	2	1	—	—	—
1085.6	BkW	0.16	0.18	0.22	0.25	0.29	0.33	0.37	0.40	0.44	0.48	0.52	0.55	—	—	—	—
	Sheave/Mtr	B	B	A	A	A	A	A	C	C	C	C	C	—	—	—	—
	RPM	339	387	435	476	518	555	590	627	659	692	721	751	—	—	—	—
	Turns Open	5	3.5	6	5	4	2.5	1.5	5.5	4.5	3	2.5	1.5	—	—	—	—
1132.8	BkW	0.18	0.22	0.25	0.29	0.33	0.37	0.40	0.44	0.48	0.52	0.55	0.59	—	—	—	—
	Sheave/Mtr	B	B	A	A	A	A	A	C	C	C	C	C	—	—	—	—
	RPM	353	403	446	485	527	563	600	633	665	697	726	756	—	—	—	—
	Turns Open	4.5	3	6	5	3.5	2.5	1.5	5.5	4	3	2	1.5	—	—	—	—
1180.0	BkW	0.21	0.23	0.25	0.29	0.33	0.37	0.40	0.44	0.48	0.55	0.59	0.63	—	—	—	—
	Sheave/Mtr	B	B	A	A	A	A	A	C	C	C	C	C	—	—	—	—
	RPM	362	411	452	495	532	567	604	636	670	700	729	759	—	—	—	—
	Turns Open	4.0	2.5	5.5	4.5	3.5	2	1	5	4	3	2	1	—	—	—	—
1227.2	BkW	0.22	0.25	0.32	0.36	0.40	0.43	0.47	0.51	0.55	0.58	0.62	0.66	—	—	—	—
	Sheave/Mtr	B	B	A	A	A	A	A	C	C	C	C	C	—	—	—	—
	RPM	377	420	460	500	536	570	606	638	671	701	729	759	—	—	—	—
	Turns Open	3.5	2	5.5	4.5	3	2	1	5	3.5	2.5	2	1	—	—	—	—
1274.4	BkW	0.25	0.28	0.32	0.36	0.40	0.44	0.48	0.52	0.55	0.59	0.63	0.67	—	—	—	—
	Sheave/Mtr	B	B	A	A	A	A	A	C	C	C	C	C	—	—	—	—
	RPM	381	423	463	504	539	576	609	641	674	703	734	762	—	—	—	—
	Turns Open	3.5	2	5	4	3	1.5	1	5	3.5	2.5	2	1	—	—	—	—
1321.6	BkW	0.25	0.29	0.33	0.37	0.40	0.48	0.52	0.55	0.59	0.63	0.67	—	—	—	—	—
	Sheave/Mtr	B	B	A	A	A	A	A	C	C	C	C	—	—	—	—	—
	RPM	390	431	474	510	545	581	613	647	677	706	737	—	—	—	—	—
	Turns Open	3	2	5	4	3	1.5	1	4.5	3.5	2.5	2	—	—	—	—	—
1368.8	BkW	0.29	0.33	0.37	0.40	0.44	0.48	0.55	0.59	0.63	0.67	0.70	—	—	—	—	—
	Sheave/Mtr	B	A	A	A	A	A	C	C	C	C	C	—	—	—	—	—
	RPM	399	440	481	517	551	586	618	651	681	710	740	—	—	—	—	—
	Turns Open	3	6	4.5	3.5	2.5	1.5	5.5	4.5	3	2.5	1.5	—	—	—	—	—

LEGEND

A — Standard rpm/Standard Motor
B — Low rpm/Standard Motor
bhp — Brake Horsepower
C — High rpm/Standard Motor
ESP — External Static Pressure

NOTES:
1. Unit is factory shipped with standard static sheave and drive at 2.5 turns open. Other speeds require field selection.
2. For applications requiring higher static pressures, contact your local Carrier representative. Performance data does not include drive losses and is based on sea level conditions.
3. All airflow is rated at lowest voltage. If unit is dual voltage rated, data is based on lowest voltage.
4. A = Standard Rpm/Standard Motor, B = Low Rpm/Standard Motor, C = High Rpm/Standard Motor.

Table 6 — 50VQP096 Blower Performance Data (cont)

AIRFLOW (l/s)		EXTERNAL STATIC PRESSURE (Pa)															
		0	25	50	75	100	125	150	175	200	225	250	275	300	325	350	375
1416.0	BkW	0.32	0.37	0.40	0.44	0.48	0.52	0.55	0.63	0.67	0.70	0.78	—	—	—	—	—
	Sheave/Mtr	B	A	A	A	A	A	C	C	C	C	C	—	—	—	—	—
	RPM	412	455	492	526	563	595	628	658	687	718	745	—	—	—	—	—
	Turns Open	2.5	5.5	4.5	3.5	2	1	5	4	3	2	1.5	—	—	—	—	—
1463.2	BkW	0.33	0.40	0.44	0.48	0.52	0.55	0.63	0.67	0.70	0.74	0.78	—	—	—	—	—
	Sheave/Mtr	B	A	A	A	A	A	C	C	C	C	C	—	—	—	—	—
	RPM	421	459	499	533	569	600	633	663	691	722	749	—	—	—	—	—
	Turns Open	2	5.5	4	3	2	1	5	4	3	2	1.5	—	—	—	—	—
1510.4	BkW	0.37	0.40	0.48	0.52	0.55	0.63	0.67	0.70	0.74	0.78	0.85	—	—	—	—	—
	Sheave/Mtr	A	A	A	A	A	A	C	C	C	C	C	—	—	—	—	—
	RPM	441	478	513	549	581	614	644	672	703	730	759	—	—	—	—	—
	Turns Open	6	5	4	2.5	1.5	1	4.5	3.5	2.5	2	1.5	—	—	—	—	—
1557.6	BkW	0.40	0.48	0.52	0.55	0.62	0.67	0.70	0.74	0.78	0.85	0.92	—	—	—	—	—
	Sheave/Mtr	A	A	A	A	A	C	C	C	C	C	C	—	—	—	—	—
	RPM	456	495	529	561	595	625	656	685	712	741	767	—	—	—	—	—
	Turns Open	5.5	4.5	3.5	2	1	5.5	4	3	2.5	2	1	—	—	—	—	—
1604.8	BkW	0.47	0.52	0.55	0.59	0.63	0.70	0.74	0.78	0.85	0.89	0.93	—	—	—	—	—
	Sheave/Mtr	A	A	A	A	A	C	C	C	C	C	C	—	—	—	—	—
	RPM	471	506	539	574	604	633	664	692	721	747	773	—	—	—	—	—
	Turns Open	5.5	4	3	1.5	1	5	4	3	2	1.5	1	—	—	—	—	—
1652.0	BkW	0.48	0.55	0.59	0.63	0.70	0.74	0.78	0.85	0.92	0.96	—	—	—	—	—	—
	Sheave/Mtr	A	A	A	A	C	C	C	C	C	C	—	—	—	—	—	—
	RPM	486	520	555	586	615	647	674	704	730	756	—	—	—	—	—	—
	Turns Open	5	3.5	2.5	1	5.5	4.5	4	3	2	1.5	—	—	—	—	—	—

LEGEND

A — Standard rpm/Standard Motor
B — Low rpm/Standard Motor
bhp — Brake Horsepower
C — High rpm/Standard Motor
ESP — External Static Pressure

NOTES:
1. Unit is factory shipped with standard static sheave and drive at 2.5 turns open. Other speeds require field selection.
2. For applications requiring higher static pressures, contact your local Carrier representative. Performance data does not include drive losses and is based on sea level conditions.
3. All airflow is rated at lowest voltage. If unit is dual voltage rated, data is based on lowest voltage.
4. A = Standard Rpm/Standard Motor, B = Low Rpm/Standard Motor, C = High Rpm/Standard Motor.

Table 7 — 50VQP120 Blower Performance Data

AIRFLOW (l/s)		EXTERNAL STATIC PRESSURE (Pa)															
		0	25	50	75	100	125	150	175	200	225	250	275	300	325	350	375
1085.6	BkW	—	—	0.18	0.19	0.22	0.27	0.30	0.34	0.37	0.42	0.45	0.48	0.52	0.55	0.60	0.63
	Sheave/Mtr	—	—	B	B	B	A	A	A	A	A	A	C	C	C	C	C
	RPM	—	—	376	423	466	503	543	580	616	649	682	712	742	770	797	822
	Turns Open	—	—	6	4.5	3	6	5	4	3	2	1	5.5	4.5	4	3	2.5
1132.8	BkW	—	—	0.19	0.22	0.27	0.30	0.34	0.37	0.42	0.45	0.52	0.52	0.57	0.60	0.67	0.70
	Sheave/Mtr	—	—	B	B	B	A	A	A	A	A	C	C	C	C	C	C
	RPM	—	—	395	439	481	517	555	592	626	659	691	722	751	779	805	831
	Turns Open	—	—	5.5	4	2.5	5.5	4.5	3.5	2.5	1.5	6	5.5	4.5	3.5	3	2
1180.0	BkW	—	—	0.22	0.25	0.30	0.33	0.37	0.40	0.45	0.48	0.55	0.60	0.63	0.67	0.70	0.75
	Sheave/Mtr	—	—	B	B	B	A	A	A	A	A	C	C	C	C	C	C
	RPM	—	—	412	455	496	530	567	603	637	669	701	730	759	787	813	839
	Turns Open	—	—	5	3	1.5	5.5	4	3	2	1	6	5	4	3.5	2.5	1.5
1227.2	BkW	—	0.22	0.25	0.30	0.33	0.37	0.40	0.45	0.48	0.55	0.60	0.63	0.67	0.70	0.75	0.78
	Sheave/Mtr	—	B	B	B	A	A	A	A	A	A	C	C	C	C	C	C
	RPM	—	385	430	471	506	544	579	614	647	679	710	739	768	795	822	847
	Turns Open	—	6	4	2.5	6	5	3.5	2.5	1.5	1	5.5	4.5	4	3	2	1.5
1274.4	BkW	—	0.25	0.30	0.33	0.37	0.40	0.45	0.48	0.55	0.60	0.63	0.67	0.70	0.75	0.78	0.82
	Sheave/Mtr	—	B	B	B	A	A	A	A	A	C	C	C	C	C	C	C
	RPM	—	403	446	486	520	556	591	625	657	689	719	748	776	803	830	855
	Turns Open	—	5	3.5	2	5.5	4.5	3.5	2.5	1	6	5.5	4.5	3.5	3	2	1
1321.6	BkW	0.25	0.30	0.33	0.37	0.40	0.45	0.48	0.52	0.60	0.63	0.67	0.70	0.75	0.78	0.82	0.90
	Sheave/Mtr	B	B	B	A	A	A	A	A	A	C	C	C	C	C	C	C
	RPM	377	421	462	501	534	569	603	636	668	698	728	757	785	812	838	860
	Turns Open	6	4.5	3	6	5	4	3	2	1	6	5	4	3.5	2.5	1.5	1
1368.8	BkW	0.30	0.33	0.37	0.40	0.45	0.48	0.52	0.55	0.63	0.67	0.70	0.75	0.78	0.85	0.90	0.93
	Sheave/Mtr	B	B	B	A	A	A	A	A	A	C	C	C	C	C	C	C
	RPM	395	438	478	515	547	582	615	647	678	708	737	765	793	819	845	868
	Turns Open	5.5	4	2.5	6	4.5	3.5	2.5	1.5	1	5.5	5	4	3	2.5	1.5	0.5
1416.0	BkW	0.33	0.37	0.40	0.44	0.48	0.52	0.55	0.63	0.67	0.70	0.78	0.82	0.85	0.89	0.93	1.00
	Sheave/Mtr	B	B	B	A	A	A	A	A	C	C	C	C	C	C	C	C
	RPM	414	453	491	529	563	595	626	659	689	717	745	774	801	826	851	877
	Turns Open	4.5	3.5	2	5.5	4.5	3.5	2.5	1.5	6	5.5	4.5	3.5	3	2	1	0.5
1463.2	BkW	0.37	0.40	0.44	0.48	0.52	0.55	0.63	0.67	0.70	0.78	0.82	0.85	0.89	0.93	1.00	1.08
	Sheave/Mtr	B	B	A	A	A	A	A	A	C	C	C	C	C	C	C	C
	RPM	431	469	504	542	575	607	637	670	699	726	754	783	809	834	859	884
	Turns Open	4	3	6	5	4	3	2	1	6	5	4.5	3.5	2.5	2	1	0.5
1510.4	BkW	0.40	0.44	0.48	0.52	0.55	0.63	0.67	0.70	0.78	0.82	0.85	0.93	0.96	1.00	1.08	1.14
	Sheave/Mtr	B	B	A	A	A	A	A	A	C	C	C	C	C	C	C	C
	RPM	448	485	520	556	588	619	649	680	708	736	765	791	817	841	868	891
	Turns Open	3.5	2	5.5	4.5	3.5	2.5	1.5	1	5.5	5	4	3	2.5	1.5	0.5	0
1557.6	BkW	0.44	0.48	0.52	0.55	0.63	0.67	0.70	0.78	0.82	0.85	0.93	0.96	1.00	1.08	1.11	1.15
	Sheave/Mtr	B	B	A	A	A	A	A	C	C	C	C	C	C	C	C	C
	RPM	464	500	537	570	601	631	662	691	718	745	774	799	824	849	875	898
	Turns Open	3	1.5	5	4	3	2	1.5	6	5.5	4.5	4	3	2	1.5	0.5	0
1604.8	BkW	0.48	0.52	0.55	0.63	0.67	0.70	0.78	0.82	0.85	0.93	0.96	1.00	1.08	1.11	1.15	—
	Sheave/Mtr	B	A	A	A	A	A	A	C	C	C	C	C	C	C	C	—
	RPM	480	515	551	583	613	642	674	701	728	754	783	808	833	857	882	—
	Turns Open	2.5	6	4.5	3.5	3	2	1	6	5	4.5	3.5	2.5	2	1	0	—
1652.0	BkW	0.52	0.55	0.63	0.67	0.70	0.78	0.82	0.85	0.93	0.96	1.00	1.08	1.15	1.19	1.23	—
	Sheave/Mtr	B	A	A	A	A	A	C	C	C	C	C	C	C	C	C	—
	RPM	496	530	565	596	625	654	684	711	738	766	792	816	841	867	890	—
	Turns Open	2	5.5	4	3.5	2.5	1.5	6	5.5	4.5	4	3	2.5	1.5	1	0	—

LEGEND

A — Standard rpm/Standard Motor
B — Low rpm/Standard Motor
bhp — Brake Horsepower
C — High rpm/Standard Motor
E — High rpm/Large Motor
ESP — External Static Pressure

NOTES:
1. Unit is factory shipped with standard static sheave and drive at 2.5 turns open. Other speeds require field selection.
2. For applications requiring higher static pressures, contact your local Carrier representative. Performance data does not include drive losses and is based on sea level conditions.
3. All airflow is rated at lowest voltage. If unit is dual voltage rated, data is based on lowest voltage.
4. A = Standard Rpm/Standard Motor, B = Low Rpm/Standard Motor, C = High Rpm/Standard Motor, E = High Rpm/Large Motor.

Table 7 — 50VQP120 Blower Performance Data (cont)

AIRFLOW (l/s)		EXTERNAL STATIC PRESSURE (Pa)															
		0	25	50	75	100	125	150	175	200	225	250	275	300	325	350	375
1699.2	BkW	0.55	0.63	0.67	0.70	0.78	0.82	0.85	0.93	1.00	1.04	1.08	1.15	1.19	1.23	1.30	—
	Sheave/Mtr	A	A	A	A	A	A	C	C	C	C	C	C	C	C	C	—
	RPM	511	544	578	608	637	668	695	722	748	776	800	825	849	874	897	—
	Turns Open	6	5	3.5	3	2	1	6	5	4.5	3.5	3	2	1.5	0.5	0	—
1746.4	BkW	0.63	0.67	0.70	0.78	0.85	0.89	0.93	1.00	1.04	1.08	1.15	1.23	1.26	1.30	—	—
	Sheave/Mtr	A	A	A	A	A	A	C	C	C	C	C	C	C	C	—	—
	RPM	526	561	592	621	649	679	706	732	758	785	809	833	857	882	—	—
	Turns Open	5.5	4.5	3.5	2.5	1.5	1	5.5	5	4	3.5	2.5	2	1	0.5	—	—
1793.6	BkW	0.67	0.70	0.78	0.82	0.85	0.93	1.00	1.04	1.08	1.15	1.23	1.26	1.30	1.38	—	—
	Sheave/Mtr	A	A	A	A	A	C	C	C	C	C	C	C	C	C	—	—
	RPM	544	575	605	633	661	691	717	742	767	794	818	842	867	890	—	—
	Turns Open	5	4	3	2	1	6	5.5	4.5	4	3	2	1.5	0.5	0	—	—
1840.8	BkW	0.70	0.78	0.85	0.89	0.93	1.00	1.08	1.11	1.15	1.23	1.30	1.34	1.38	1.45	—	—
	Sheave/Mtr	A	A	A	A	A	C	C	C	C	C	C	C	C	E	—	—
	RPM	555	589	618	646	676	702	728	753	779	803	827	850	875	898	—	—
	Turns Open	4.5	3.5	2.5	1.5	6	6	5	4	3.5	2.5	2	1	0.5	0	—	—
1888.0	BkW	0.78	0.82	0.85	0.93	1.00	1.08	1.11	1.15	1.23	1.30	1.34	1.38	1.50	1.53	—	—
	Sheave/Mtr	A	A	A	A	C	C	C	C	C	C	C	C	E	E	—	—
	RPM	572	601	630	657	686	712	737	762	789	812	836	859	883	905	—	—
	Turns Open	4	3	2	1	6	5.5	4.5	4	3	2.5	1.5	1	0	0	—	—
1935.2	BkW	0.85	0.89	0.93	1.00	1.08	1.11	1.15	1.23	1.30	1.38	1.41	1.50	1.53	—	—	—
	Sheave/Mtr	A	A	A	A	C	C	C	C	C	C	C	E	E	—	—	—
	RPM	589	617	645	672	700	726	751	775	801	824	847	872	894	—	—	—
	Turns Open	3.5	2.5	1.5	1	6	5	4.5	3.5	2.5	2	1	0.5	0	—	—	—
1982.4	BkW	0.93	0.96	1.00	1.08	1.15	1.19	1.23	1.30	1.38	1.50	1.53	1.56	—	—	—	—
	Sheave/Mtr	A	A	A	C	C	C	C	C	C	E	E	E	—	—	—	—
	RPM	605	633	660	689	714	739	763	790	813	836	858	882	—	—	—	—
	Turns Open	3	2	1	6	5.5	4.5	4	3	2	1.5	1	0.5	—	—	—	—
2029.6	BkW	0.96	1.00	1.08	1.15	1.23	1.26	1.30	1.38	1.50	1.53	1.60	1.68	—	—	—	—
	Sheave/Mtr	A	A	A	C	C	C	C	C	E	E	E	E	—	—	—	—
	RPM	621	649	675	703	728	752	776	802	827	847	869	893	—	—	—	—
	Turns Open	2.5	1.5	1	6	5	4	3.5	2.5	2	1.5	1	0	—	—	—	—
2076.8	BkW	1.040	1.08	1.15	1.23	1.30	1.38	1.41	1.50	1.53	1.60	1.68	1.75	—	—	—	—
	Sheave/Mtr	A	A	C	C	C	C	C	E	C	E	E	E	—	—	—	—
	RPM	637	664	690	717	742	766	791	814	836	858	882	904	—	—	—	—
	Turns Open	2	1	6	5.5	4.5	4	3	2	2	1	0.5	0	—	—	—	—
2124.0	BkW	1.11	1.15	1.23	1.30	1.38	1.45	1.53	1.56	1.60	1.68	1.75	—	—	—	—	—
	Sheave/Mtr	A	A	C	C	C	C	E	E	C	E	E	—	—	—	—	—
	RPM	653	679	707	731	755	779	804	826	848	870	893	—	—	—	—	—
	Turns Open	1.5	1	5.5	5	4	3.5	3	2	1.5	1	0	—	—	—	—	—
2029.6	BkW	0.96	1.00	1.08	1.15	1.23	1.26	1.30	1.38	1.50	1.53	1.60	1.68	—	—	—	—
	Sheave/Mtr	A	A	A	C	C	C	C	C	E	E	E	E	—	—	—	—
	RPM	621	649	675	703	728	752	776	802	827	847	869	893	—	—	—	—
	Turns Open	2.5	1.5	1	6	5	4	3.5	2.5	2	1.5	1	0	—	—	—	—

LEGEND

A — Standard rpm/Standard Motor
B — Low rpm/Standard Motor
bhp — Brake Horsepower
C — High rpm/Standard Motor
E — High rpm/Large Motor
ESP — External Static Pressure

NOTES:

1. Unit is factory shipped with standard static sheave and drive at 2.5 turns open. Other speeds require field selection.
2. For applications requiring higher static pressures, contact your local Carrier representative. Performance data does not include drive losses and is based on sea level conditions.
3. All airflow is rated at lowest voltage. If unit is dual voltage rated, data is based on lowest voltage.
4. A = Standard Rpm/Standard Motor, B = Low Rpm/Standard Motor, C = High Rpm/Standard Motor, E = High Rpm/Large Motor.

Table 8 — 50VQP150 Blower Performance Data

AIRFLOW (l/s)		EXTERNAL STATIC PRESSURE (Pa)															
		0	25	50	75	100	125	150	175	200	225	250	275	300	325	350	375
1321.6	BkW	—	—	—	—	—	0.34	0.37	0.42	0.49	0.52	0.57	0.64	0.72	0.79	0.87	0.94
	Sheave/Mtr	—	—	—	—	—	B	B	A	A	A	A	A	A	C	C	C
	RPM	—	—	—	—	—	533	572	606	640	676	712	746	783	821	859	901
	Turns Open	—	—	—	—	—	5.5	4	6	5	4	3	2	1	5.5	4.5	3
1368.8	BkW	—	—	—	—	—	0.37	0.42	0.45	0.52	0.57	0.60	0.67	0.75	0.81	0.90	0.97
	Sheave/Mtr	—	—	—	—	—	B	B	A	A	A	A	A	A	C	C	C
	RPM	—	—	—	—	—	544	582	619	652	686	719	754	789	823	860	902
	Turns Open	—	—	—	—	—	5	4	5.5	4.5	3.5	2.5	1.5	1	5.5	4	3
1416.0	BkW	—	—	—	—	0.37	0.42	0.45	0.52	0.57	0.60	0.67	0.75	0.79	0.82	0.94	1.02
	Sheave/Mtr	—	—	—	—	B	B	B	A	A	A	A	A	C	C	C	C
	RPM	—	—	—	—	521	558	595	628	663	697	728	762	796	828	863	903
	Turns Open	—	—	—	—	6	4.5	3.5	5.5	4.5	3.5	2.5	1.5	6	5	4	3
1463.2	BkW	—	—	—	—	0.42	0.45	0.52	0.55	0.60	0.64	0.72	0.78	0.82	0.90	0.97	1.05
	Sheave/Mtr	—	—	—	—	B	B	A	A	A	A	A	A	C	C	C	C
	RPM	—	—	—	—	536	572	608	640	674	705	737	769	799	832	866	904
	Turns Open	—	—	—	—	5.5	4	6	5	4	3	2	1	6	5	4	3
1510.4	BkW	—	—	—	—	0.45	0.49	0.55	0.60	0.67	0.70	0.75	0.85	0.90	0.97	1.05	1.12
	Sheave/Mtr	—	—	—	—	B	B	A	A	A	A	A	A	C	C	C	C
	RPM	—	—	—	—	548	585	618	652	685	715	747	778	807	836	868	905
	Turns Open	—	—	—	—	5	3.5	5.5	4.5	3.5	2.5	1.5	1	5.5	5	3.5	3
1557.6	BkW	—	—	—	0.45	0.48	0.52	0.60	0.64	0.70	0.78	0.82	0.90	0.93	1.00	1.08	1.15
	Sheave/Mtr	—	—	—	B	B	A	A	A	A	A	A	A	C	C	C	C
	RPM	—	—	—	522	562	599	631	664	694	725	756	784	815	845	874	906
	Turns Open	—	—	—	6	4.5	6	5.5	4	3	2.5	1.5	1	5.5	4.5	3.5	3
1604.8	BkW	—	—	—	0.48	0.52	0.57	0.63	0.67	0.75	0.82	0.85	0.93	1.00	1.08	1.15	1.20
	Sheave/Mtr	—	—	—	B	B	A	A	A	A	A	A	C	C	C	C	C
	RPM	—	—	—	537	576	612	643	676	705	736	763	793	823	850	880	908
	Turns Open	—	—	—	5.5	4	5.5	5	4	3	2	1	6	5	4.5	3.5	2.5
1652.0	BkW	—	—	—	0.52	0.57	0.60	0.67	0.75	0.78	0.85	0.93	1.00	1.05	1.12	1.20	1.23
	Sheave/Mtr	—	—	—	B	B	A	A	A	A	A	A	C	C	C	C	C
	RPM	—	—	—	551	589	622	655	685	716	746	776	802	829	858	886	913
	Turns Open	—	—	—	5	3.5	5.5	4.5	3.5	2.5	2	1	6	5	4	3	2.5
1699.2	BkW	—	—	0.52	0.55	0.60	0.67	0.75	0.78	0.85	0.93	0.97	1.05	1.08	1.15	1.23	1.30
	Sheave/Mtr	—	—	B	B	A	A	A	A	A	A	C	C	C	C	C	C
	RPM	—	—	526	565	600	634	665	696	727	754	783	809	837	865	891	919
	Turns Open	—	—	6	4.5	6	5	4	3	2	1.5	6	5.5	4.5	4	3	2.5
1746.4	BkW	—	—	0.55	0.63	0.67	0.70	0.78	0.85	0.93	0.97	1.00	1.08	1.15	1.23	1.30	1.38
	Sheave/Mtr	—	—	B	B	A	A	A	A	A	A	C	C	C	C	C	C
	RPM	—	—	541	579	613	647	677	707	737	764	793	818	846	871	898	926
	Turns Open	—	—	5.5	4	5.5	4.5	4	3	2	1.5	6	5.5	4.5	3.5	3	2
1793.6	BkW	—	0.55	0.63	0.67	0.70	0.78	0.85	0.93	0.96	1.00	1.08	1.15	1.23	1.30	1.38	1.45
	Sheave/Mtr	—	B	B	B	A	A	A	A	A	A	C	C	C	C	C	C
	RPM	—	519	554	591	626	659	688	718	746	774	802	829	855	879	905	931
	Turns Open	—	6	5	3.5	5.5	4.5	3.5	2.5	2	1	5.5	5	4.5	3.5	2.5	2
1840.8	BkW	—	0.59	0.63	0.70	0.78	0.85	0.89	0.93	1.00	1.08	1.15	1.23	1.30	1.38	1.45	1.52
	Sheave/Mtr	—	B	B	A	A	A	A	A	A	A	C	C	C	C	C	C
	RPM	—	531	569	605	639	669	702	729	757	785	811	838	862	887	913	938
	Turns Open	—	5.5	4.5	6	5	4	3	2.5	1.5	1	5.5	5	4	3.5	2.5	2
1888.0	BkW	—	0.63	0.70	0.78	0.85	0.89	0.93	1.00	1.08	1.15	1.23	1.26	1.30	1.38	1.45	1.53
	Sheave/Mtr	—	B	B	A	A	A	A	A	A	C	C	C	C	C	C	C
	RPM	—	545	582	618	651	683	710	739	767	794	821	845	870	895	920	945
	Turns Open	—	5	4	5.5	4.5	4	3	2	1.5	6	5.5	4.5	4	3	2.5	2
1935.2	BkW	0.63	0.70	0.78	0.82	0.85	0.93	1.00	1.08	1.15	1.23	1.26	1.30	1.38	1.45	1.53	1.60
	Sheave/Mtr	B	B	B	A	A	A	A	A	A	C	C	C	C	C	C	C
	RPM	523	560	596	631	661	692	722	750	778	804	831	854	879	904	928	951
	Turns Open	6	4.5	3.5	5.5	4.5	3.5	2.5	1.5	1	6	5	4.5	3.5	3	2	1.5

LEGEND

A — Standard rpm/Standard Motor
B — Low rpm/Standard Motor
bhp — Brake Horsepower
C — High rpm/Standard Motor
E — High rpm/Large Motor
ESP — External Static Pressure

NOTES:

1. Unit is factory shipped with standard static sheave and drive at 2.5 turns open. Other speeds require field selection.
2. For applications requiring higher static pressures, contact your local Carrier representative. Performance data does not include drive losses and is based on sea level conditions.
3. All airflow is rated at lowest voltage. If unit is dual voltage rated, data is based on lowest voltage.
4. A = Standard Rpm/Standard Motor, B = Low Rpm/Standard Motor, C = High Rpm/Standard Motor, E = High Rpm/Large Motor.

Table 8 — 50VQP150 Blower Performance Data (cont)

AIRFLOW (l/s)		EXTERNAL STATIC PRESSURE (Pa)															
		0	25	50	75	100	125	150	175	200	225	250	275	300	325	350	375
1982.4	BkW	0.70	0.74	0.78	0.85	0.93	1.00	1.08	1.15	1.19	1.23	1.30	1.38	1.45	1.53	1.60	1.68
	Sheave/Mtr	B	B	A	A	A	A	A	A	A	C	C	C	C	C	C	C
	RPM	538	574	609	640	673	703	733	761	788	812	838	863	888	912	934	958
	Turns Open	5.5	4	6	5	4	3	2	1.5	1	5.5	5	4	3.5	2.5	2	1.5
2029.6	BkW	0.70	0.78	0.85	0.93	1.00	1.08	1.15	1.19	1.23	1.30	1.38	1.45	1.53	1.60	1.68	1.75
	Sheave/Mtr	B	B	A	A	A	A	A	A	C	C	C	C	C	C	C	C
	RPM	553	588	620	653	685	715	744	771	796	822	847	872	896	919	942	966
	Turns Open	5	3.5	5.5	4.5	3.5	2.5	2	1	6	5.5	4.5	4	3	2.5	1.5	1
2076.8	BkW	0.78	0.85	0.93	1.00	1.08	1.15	1.19	1.23	1.30	1.38	1.45	1.53	1.60	1.68	1.75	1.83
	Sheave/Mtr	B	B	A	A	A	A	A	A	C	C	C	C	C	C	C	C
	RPM	568	602	633	666	697	726	755	782	806	832	857	881	904	927	950	973
	Turns Open	4.5	3	5	4	3.5	2.5	1.5	1	6	5	4.5	3.5	3	2	1.5	1
2124.0	BkW	0.85	0.90	0.97	1.05	1.12	1.20	1.27	1.35	1.42	1.50	1.57	1.65	1.72	1.80	1.87	—
	Sheave/Mtr	B	A	A	A	A	A	A	C	C	C	C	C	C	C	C	—
	RPM	581	613	646	678	706	735	763	791	817	842	867	889	912	935	958	—
	Turns Open	4	6	4.5	4	3	2	1.5	6	5.5	4.5	4	3	2.5	2	1.5	—
2171.2	BkW	0.89	0.93	1.00	1.08	1.15	1.23	1.30	1.38	1.45	1.53	1.60	1.68	1.75	1.83	1.90	—
	Sheave/Mtr	B	A	A	A	A	A	A	C	C	C	C	C	C	C	C	—
	RPM	598	623	656	687	715	744	772	799	825	850	872	896	919	942	963	—
	Turns Open	3.5	5.5	4.5	3.5	2.5	2	1	6	5.5	4.5	3.5	3	2	1.5	1	—
2218.4	BkW	0.93	1.00	1.08	1.15	1.23	1.30	1.38	1.45	1.53	1.60	1.68	1.75	1.83	1.90	1.97	—
	Sheave/Mtr	A	A	A	A	A	A	A	C	C	C	C	C	C	C	C	—
	RPM	605	637	666	697	727	755	783	809	835	858	882	905	928	951	973	—
	Turns Open	6	5	4	3	2.5	1.5	1	5.5	5	4	3.5	2.5	2	1.5	1	—
2265.6	BkW	1.00	1.08	1.15	1.23	1.30	1.38	1.45	1.53	1.60	1.68	1.75	1.83	1.90	1.97	2.05	—
	Sheave/Mtr	A	A	A	A	A	A	C	C	C	C	C	C	C	C	C	—
	RPM	618	647	678	708	738	766	793	819	844	867	891	914	937	959	980	—
	Turns Open	5.5	4.5	4	3	2	1	6	5.5	4.5	4	3	2.5	1.5	1.5	1	—
2312.8	BkW	1.08	1.15	1.23	1.30	1.38	1.45	1.53	1.60	1.68	1.75	1.83	1.90	1.97	2.05	2.12	—
	Sheave/Mtr	A	A	A	A	A	A	C	C	C	C	C	C	C	C	C	—
	RPM	631	662	690	720	749	777	803	827	852	877	900	923	946	966	988	—
	Turns Open	5.5	4	3.5	2.5	1.5	1	6	5	4.5	3.5	3	2	1.5	1	1	—
2360.0	BkW	1.15	1.23	1.30	1.38	1.45	1.53	1.60	1.68	1.75	1.83	1.90	1.97	2.05	2.12	—	—
	Sheave/Mtr	A	A	A	A	A	C	C	C	C	C	C	C	C	C	—	—
	RPM	642	672	702	731	760	785	811	837	862	886	909	932	953	975	—	—
	Turns Open	5	4	3	2	1.5	6	5.5	4.5	4	3	2.5	1.5	1	1	—	—
2407.2	BkW	1.23	1.30	1.38	1.45	1.53	1.60	1.68	1.75	1.83	1.90	1.97	2.05	2.12	—	—	—
	Sheave/Mtr	A	A	A	A	A	C	C	C	C	C	C	C	C	—	—	—
	RPM	655	685	714	743	769	798	822	847	872	896	917	940	962	—	—	—
	Turns Open	4.5	3.5	2.5	1.5	1	6	5	4.5	3.5	3	2.5	1.5	1	—	—	—
2454.4	BkW	1.30	1.38	1.45	1.53	1.60	1.68	1.75	1.83	1.90	1.97	2.05	2.12	2.24	—	—	—
	Sheave/Mtr	A	A	A	A	C	C	C	C	C	C	C	C	E	—	—	—
	RPM	668	697	726	752	782	806	832	857	882	903	926	949	971	—	—	—
	Turns Open	4	3	2.5	1.5	6	5.5	5	4	3.5	2.5	2	1	0	—	—	—
2501.6	BkW	1.38	1.45	1.53	1.60	1.68	1.75	1.83	1.90	1.97	2.05	2.12	2.20	2.31	—	—	—
	Sheave/Mtr	A	A	A	A	C	C	C	C	C	C	C	C	E	—	—	—
	RPM	680	709	737	763	790	817	842	867	889	912	935	957	979	—	—	—
	Turns Open	3.5	3	2	1	6	5.5	4.5	4	3	2	2	C	0	—	—	—
2548.8	BkW	1.45	1.53	1.60	1.68	1.75	1.83	1.90	1.97	2.05	2.12	2.20	2.31	—	—	—	—
	Sheave/Mtr	A	A	A	A	C	C	C	C	C	C	C	E	—	—	—	—
	RPM	691	717	745	772	799	825	850	873	897	920	943	965	—	—	—	—
	Turns Open	3.5	2.5	1.5	1	5.5	5	4.5	3.5	3	2	1.5	0	—	—	—	—
2596.0	BkW	1.53	1.60	1.68	1.75	1.83	1.90	1.97	2.05	2.12	2.31	2.35	2.42	—	—	—	—
	Sheave/Mtr	A	A	A	C	C	C	C	C	C	E	E	E	—	—	—	—
	RPM	704	729	756	783	810	836	859	883	907	929	952	972	—	—	—	—
	Turns Open	3	2	1.5	6	5.5	5	4	3.5	2.5	1	0.5	0	—	—	—	—

LEGEND

A — Standard rpm/Standard Motor
B — Low rpm/Standard Motor
bhp — Brake Horsepower
C — High rpm/Standard Motor
E — High rpm/Large Motor
ESP — External Static Pressure

NOTES:
1. Unit is factory shipped with standard static sheave and drive at 2.5 turns open. Other speeds require field selection.
2. For applications requiring higher static pressures, contact your local Carrier representative. Performance data does not include drive losses and is based on sea level conditions.
3. All airflow is rated at lowest voltage. If unit is dual voltage rated, data is based on lowest voltage.
4. A = Standard Rpm/Standard Motor, B = Low Rpm/Standard Motor, C = High Rpm/Standard Motor, E = High Rpm/Large Motor.

Table 9 — 50VQP168 Blower Performance Data

AIRFLOW (l/s)		EXTERNAL STATIC PRESSURE (Pa)															
		0	25	50	75	100	125	150	175	200	225	250	275	300	325	350	375
1510.4	BkW	—	—	0.23	0.30	0.26	0.38	0.45	0.48	0.51	0.60	0.63	0.66	0.75	0.78	—	—
	Sheave/Mtr	—	—	B	B	B	A	A	A	A	A	C	C	C	C	—	—
	RPM	—	—	388	437	482	527	564	599	630	663	690	716	744	767	—	—
	Turns Open	—	—	6	4	2.5	5.5	4.5	3.5	2.5	1.5	3.5	2.5	2	1	—	—
1604.8	BkW	—	—	0.25	0.32	0.30	0.41	0.48	0.51	0.55	0.63	0.67	0.71	0.80	0.84	—	—
	Sheave/Mtr	—	—	B	B	B	A	A	A	A	A	C	C	C	C	—	—
	RPM	—	—	392	440	485	529	566	601	633	666	693	720	747	771	—	—
	Turns Open	—	—	5.5	4	2.5	5.5	4.5	3.5	2.5	1.5	3	2.5	2	1	—	—
1699.2	BkW	—	—	0.27	0.34	0.34	0.44	0.50	0.54	0.59	0.67	0.71	0.76	0.84	—	—	—
	Sheave/Mtr	—	—	B	B	B	A	A	A	A	A	C	C	C	—	—	—
	RPM	—	—	395	444	488	530	568	603	636	668	697	723	751	—	—	—
	Turns Open	—	—	5.5	4	2.5	5.5	4	3.5	2.5	1	3	2.5	1.5	—	—	—
1793.6	BkW	—	—	0.29	0.37	0.39	0.47	0.53	0.57	0.62	0.70	0.76	0.81	0.89	—	—	—
	Sheave/Mtr	—	—	B	B	B	A	A	A	A	A	C	C	C	—	—	—
	RPM	—	—	399	447	491	532	571	606	639	671	700	727	754	—	—	—
	Turns Open	—	—	5.5	3.5	2	5	4	3	2	1	3	2	1.5	—	—	—
1888.0	BkW	—	—	0.32	0.39	0.43	0.50	0.56	0.60	0.66	0.74	0.80	0.86	0.94	—	—	—
	Sheave/Mtr	—	—	B	B	B	A	A	A	A	A	C	C	C	—	—	—
	RPM	—	—	403	450	493	534	573	608	641	673	703	730	757	—	—	—
	Turns Open	—	—	5	3.5	2	5	4	3	2	1	2.5	2	1.5	—	—	—
1982.4	BkW	—	0.24	0.36	0.43	0.51	0.55	0.61	0.66	0.73	0.81	0.88	0.96	1.03	—	—	—
	Sheave/Mtr	—	B	B	B	B	A	A	A	A	A	C	C	C	—	—	—
	RPM	—	362	410	457	499	537	577	612	647	678	710	737	764	—	—	—
	Turns Open	—	6	5	3.5	2	5	3.5	3	2	1	2.5	2	1	—	—	—
2076.8	BkW	—	0.34	0.42	0.47	0.51	0.58	0.66	0.73	0.81	0.88	0.96	1.03	1.11	—	—	—
	Sheave/Mtr	—	B	B	B	B	A	A	A	A	C	C	C	C	—	—	—
	RPM	—	375	424	467	507	548	584	621	653	684	716	743	772	—	—	—
	Turns Open	—	6	4.5	3	1.5	4.5	3.5	2.5	1.5	3.5	2.5	1.5	1	—	—	—
2171.2	BkW	—	0.36	0.43	0.51	0.58	0.66	0.73	0.81	0.88	0.96	1.03	1.11	—	—	—	—
	Sheave/Mtr	—	B	B	B	B	A	A	A	A	C	C	C	—	—	—	—
	RPM	—	387	435	476	518	555	590	627	659	692	721	751	—	—	—	—
	Turns Open	—	5.5	4	3	1.5	4.5	3.5	2.5	1.5	3	2.5	1.5	—	—	—	—
2265.6	BkW	—	0.43	0.51	0.58	0.66	0.73	0.81	0.88	0.96	1.03	1.11	1.18	—	—	—	—
	Sheave/Mtr	—	B	B	B	A	A	A	A	A	C	C	C	—	—	—	—
	RPM	—	403	446	485	527	563	600	633	665	697	726	756	—	—	—	—
	Turns Open	—	5.5	4	2.5	5.5	4.5	3	2.5	1	3	2	1.5	—	—	—	—
2360.0	BkW	0.42	0.46	0.51	0.58	0.66	0.73	0.81	0.88	0.96	1.11	1.18	1.26	—	—	—	—
	Sheave/Mtr	B	B	B	B	A	A	A	A	A	C	C	C	—	—	—	—
	RPM	362	411	452	495	532	567	604	636	670	700	729	759	—	—	—	—
	Turns Open	6	5	3.5	2	5.5	4	3	2	1	3	2	1	—	—	—	—
2454.4	BkW	0.43	0.51	0.64	0.72	0.79	0.87	0.94	1.02	1.09	1.17	1.24	1.32	—	—	—	—
	Sheave/Mtr	B	B	B	B	A	A	A	A	C	C	C	C	—	—	—	—
	RPM	377	420	460	500	536	570	606	638	671	701	729	759	—	—	—	—
	Turns Open	6	4.5	3.5	2	5	4	3	2	4	2.5	2	1	—	—	—	—
2548.8	BkW	0.49	0.57	0.64	0.72	0.79	0.88	0.96	1.03	1.11	1.18	1.26	1.33	—	—	—	—
	Sheave/Mtr	B	B	B	B	A	A	A	A	C	C	C	C	—	—	—	—
	RPM	381	423	463	504	539	576	609	641	674	703	734	762	—	—	—	—
	Turns Open	5.5	4.5	3	1.5	5	3.5	2.5	2	3.5	2.5	1.5	1	—	—	—	—
2643.2	BkW	0.51	0.58	0.66	0.73	0.81	0.96	1.03	1.11	1.18	1.26	1.33	—	—	—	—	—
	Sheave/Mtr	B	B	B	B	A	A	A	A	C	C	C	—	—	—	—	—
	RPM	390	431	474	510	545	581	613	647	677	706	737	—	—	—	—	—
	Turns Open	5.5	4	3	1.5	5	3.5	2.5	1.5	3.5	2.5	1.5	—	—	—	—	—
2737.6	BkW	0.58	0.66	0.73	0.81	0.88	0.96	1.11	1.18	1.26	1.33	1.41	—	—	—	—	—
	Sheave/Mtr	B	B	B	A	A	A	A	A	C	C	C	—	—	—	—	—
	RPM	399	440	481	517	551	586	618	651	681	710	740	—	—	—	—	—
	Turns Open	5	4	2.5	5.5	4.5	3.5	2.5	1.5	3.5	2	1.5	—	—	—	—	—
2832.0	BkW	0.64	0.73	0.81	0.88	0.96	1.03	1.11	1.26	1.33	1.41	1.56	—	—	—	—	—
	Sheave/Mtr	B	B	B	A	A	A	A	A	C	C	C	—	—	—	—	—
	RPM	412	455	492	526	563	595	628	658	687	718	745	—	—	—	—	—
	Turns Open	5	3.5	2	5.5	4	3	2	1	3	2	1	—	—	—	—	—

LEGEND

A — Standard rpm/Standard Motor
B — Low rpm/Standard Motor
bhp — Brake Horsepower
C — High rpm/Standard Motor
ESP — External Static Pressure

NOTES:
1. Unit is factory shipped with standard static sheave and drive at 2.5 turns open. Other speeds require field selection.
2. For applications requiring higher static pressures, contact your local Carrier representative. Performance data does not include drive losses and is based on sea level conditions.
3. All airflow is rated at lowest voltage. If unit is dual voltage rated, data is based on lowest voltage.
4. A = Standard Rpm/Standard Motor, B = Low Rpm/Standard Motor, C = High Rpm/Standard Motor

Table 10 — 50VQP192 Blower Performance Data

AIRFLOW (l/s)		EXTERNAL STATIC PRESSURE (Pa)															
		0	25	50	75	100	125	150	175	200	225	250	275	300	325	350	375
1699.2	BkW	—	—	0.27	0.34	0.34	0.44	0.50	0.54	0.59	0.67	0.71	0.76	0.84	—	—	—
	Sheave/Mtr	—	—	B	B	B	A	A	A	A	A	C	C	C	—	—	—
	RPM	—	—	395	444	488	530	568	603	636	668	697	723	751	—	—	—
	Turns Open	—	—	5.5	4	2.5	5.5	4	3.5	2	1	3	2.5	1.5	—	—	—
1793.6	BkW	—	—	0.29	0.37	0.39	0.47	0.53	0.57	0.62	0.70	0.76	0.81	0.89	—	—	—
	Sheave/Mtr	—	—	B	B	B	A	A	A	A	A	C	C	C	—	—	—
	RPM	—	—	399	447	491	532	571	606	639	671	700	727	754	—	—	—
	Turns Open	—	—	5.5	4	2.5	5.5	4	3	2	1	3	2	1.5	—	—	—
1888.0	BkW	—	—	0.32	0.39	0.43	0.50	0.56	0.60	0.66	0.74	0.80	0.86	0.94	—	—	—
	Sheave/Mtr	—	—	B	B	B	A	A	A	A	A	C	C	C	—	—	—
	RPM	—	—	403	450	493	534	573	608	641	673	703	730	757	—	—	—
	Turns Open	—	—	5.5	3.5	2	5	4	3	2	1	2.5	2	1.5	—	—	—
1982.4	BkW	—	—	0.36	0.43	0.51	0.55	0.61	0.66	0.73	0.81	0.88	0.96	1.03	—	—	—
	Sheave/Mtr	—	—	B	B	B	A	A	A	A	A	C	C	C	—	—	—
	RPM	—	—	410	457	499	537	577	612	647	678	710	737	764	—	—	—
	Turns Open	—	—	5	3.5	2	5	3.5	3	1.5	1	2.5	2	1	—	—	—
2076.8	BkW	—	0.34	0.42	0.47	0.51	0.58	0.66	0.73	0.81	0.88	0.96	1.03	1.11	—	—	—
	Sheave/Mtr	—	B	B	B	B	A	A	A	A	C	C	C	C	—	—	—
	RPM	—	375	424	467	507	548	584	621	653	684	716	743	772	—	—	—
	Turns Open	—	6	4.5	3	1.5	5	3.5	2.5	1.5	3.5	2.5	1.5	1	—	—	—
2171.2	BkW	—	0.36	0.43	0.51	0.58	0.66	0.73	0.81	0.88	0.96	1.03	1.11	—	—	—	—
	Sheave/Mtr	—	B	B	B	A	A	A	A	A	C	C	C	—	—	—	—
	RPM	—	387	435	476	518	555	590	627	659	692	721	751	—	—	—	—
	Turns Open	—	6	4	3	6	4.5	3.5	2.5	1.5	3	2.5	1.5	—	—	—	—
2265.6	BkW	—	0.43	0.51	0.58	0.66	0.73	0.81	0.88	0.96	1.03	1.11	1.18	—	—	—	—
	Sheave/Mtr	—	B	B	B	A	A	A	A	A	C	C	C	—	—	—	—
	RPM	—	403	446	485	527	563	600	633	665	697	726	756	—	—	—	—
	Turns Open	—	5.5	4	2.5	5.5	4.5	3.5	2.5	1	3	2	1.5	—	—	—	—
2360.0	BkW	0.42	0.46	0.51	0.58	0.66	0.73	0.81	0.88	0.96	1.11	1.18	1.26	—	—	—	—
	Sheave/Mtr	B	B	B	B	A	A	A	A	A	C	C	C	—	—	—	—
	RPM	362	411	452	495	532	567	604	636	670	700	729	759	—	—	—	—
	Turns Open	6	5	3.5	2	5.5	4	3	2	1	3	2	1	—	—	—	—
2454.4	BkW	0.43	0.51	0.64	0.72	0.79	0.87	0.94	1.02	1.09	1.17	1.24	1.32	—	—	—	—
	Sheave/Mtr	B	B	B	B	A	A	A	A	C	C	C	C	—	—	—	—
	RPM	377	420	460	500	536	570	606	638	671	701	729	759	—	—	—	—
	Turns Open	6	4.5	3.5	2	5	4	3	2	3.5	2.5	2	1	—	—	—	—
2548.8	BkW	0.49	0.57	0.64	0.72	0.79	0.88	0.96	1.03	1.11	1.18	1.26	1.33	—	—	—	—
	Sheave/Mtr	B	B	B	A	A	A	A	A	C	C	C	C	—	—	—	—
	RPM	381	423	463	504	539	576	609	641	674	703	734	762	—	—	—	—
	Turns Open	6	4.5	3	6	5	3.5	3	2	3.5	2.5	2	1	—	—	—	—
2643.2	BkW	0.51	0.58	0.66	0.73	0.81	0.96	1.03	1.11	1.18	1.26	1.33	—	—	—	—	—
	Sheave/Mtr	B	B	B	A	A	A	A	A	C	C	C	—	—	—	—	—
	RPM	390	431	474	510	545	581	613	647	677	706	737	—	—	—	—	—
	Turns Open	5.5	4.5	3	6	4.5	3.5	3	1.5	3.5	2.5	1.5	—	—	—	—	—
2737.6	BkW	0.58	0.66	0.73	0.81	0.88	0.96	1.11	1.18	1.26	1.33	1.41	—	—	—	—	—
	Sheave/Mtr	B	B	B	A	A	A	A	A	C	C	C	—	—	—	—	—
	RPM	399	440	481	517	551	586	618	651	681	710	740	—	—	—	—	—
	Turns Open	5.5	4	2.5	5.5	4.5	3.5	2.5	1.5	3	2.5	1.5	—	—	—	—	—
2832.0	BkW	0.64	0.73	0.81	0.88	0.96	1.03	1.11	1.26	1.33	1.41	1.56	—	—	—	—	—
	Sheave/Mtr	B	B	B	A	A	A	A	A	C	C	C	—	—	—	—	—
	RPM	412	455	492	526	563	595	628	658	687	718	745	—	—	—	—	—
	Turns Open	5	3.5	2	5.5	4	3	2	1	3	2	1.5	—	—	—	—	—

LEGEND

A — Standard rpm/Standard Motor
B — Low rpm/Standard Motor
bhp — Brake Horsepower
C — High rpm/Standard Motor
ESP — External Static Pressure

NOTES:
1. Unit is factory shipped with standard static sheave and drive at 2.5 turns open. Other speeds require field selection.
2. For applications requiring higher static pressures, contact your local Carrier representative. Performance data does not include drive losses and is based on sea level conditions.
3. All airflow is rated at lowest voltage. If unit is dual voltage rated, data is based on lowest voltage.
4. A = Standard Rpm/Standard Motor, B = Low Rpm/Standard Motor, C = High Rpm/Standard Motor.

Table 10 — 50VQP192 Blower Performance Data (cont)

AIRFLOW (l/s)		EXTERNAL STATIC PRESSURE (Pa)															
		0	25	50	75	100	125	150	175	200	225	250	275	300	325	350	375
2926.4	BkW	0.66	0.79	0.88	0.96	1.03	1.11	1.26	1.33	1.41	1.48	1.56	—	—	—	—	—
	Sheave/Mtr	B	B	B	A	A	A	A	A	C	C	C	—	—	—	—	—
	RPM	421	459	499	533	569	600	633	663	691	722	749	—	—	—	—	—
	Turns Open	4.5	3.5	2	5	4	3	2	1	2.5	2	1.5	—	—	—	—	—
3020.8	BkW	0.73	0.81	0.96	1.03	1.11	1.26	1.33	1.41	1.48	1.56	1.71	—	—	—	—	—
	Sheave/Mtr	B	B	A	A	A	A	A	C	C	C	C	—	—	—	—	—
	RPM	441	478	513	549	581	614	644	672	703	730	759	—	—	—	—	—
	Turns Open	4	2.5	6	4.5	3.5	3	1.5	3.5	2.5	2	1	—	—	—	—	—
3115.2	BkW	0.81	0.96	1.03	1.11	1.24	1.33	1.41	1.48	1.56	1.71	1.84	—	—	—	—	—
	Sheave/Mtr	B	B	A	A	A	A	A	C	C	C	C	—	—	—	—	—
	RPM	456	495	529	561	595	625	656	685	712	741	767	—	—	—	—	—
	Turns Open	3.5	2	5.5	4	3	2.5	1	3.5	2.5	2	1	—	—	—	—	—
3209.6	BkW	0.94	1.03	1.11	1.18	1.26	1.41	1.48	1.56	1.71	1.78	1.86	—	—	—	—	—
	Sheave/Mtr	B	A	A	A	A	A	A	C	C	C	C	—	—	—	—	—
	RPM	471	506	539	574	604	633	664	692	721	747	773	—	—	—	—	—
	Turns Open	3	6	5	3.5	3	2	1	3	2	2	1	—	—	—	—	—
3304.0	BkW	0.96	1.11	1.18	1.26	1.41	1.48	1.56	1.71	1.84	1.93	—	—	—	—	—	—
	Sheave/Mtr	B	A	A	A	A	A	A	C	C	C	—	—	—	—	—	—
	RPM	486	520	555	586	615	647	674	704	730	756	—	—	—	—	—	—
	Turns Open	2.5	5.5	4.5	3	2.5	1.5	1	3	2	1.5	—	—	—	—	—	—

LEGEND

A — Standard rpm/Standard Motor
B — Low rpm/Standard Motor
bhp — Brake Horsepower
C — High rpm/Standard Motor
ESP — External Static Pressure

NOTES:
1. Unit is factory shipped with standard static sheave and drive at 2.5 turns open. Other speeds require field selection.
2. For applications requiring higher static pressures, contact your local Carrier representative. Performance data does not include drive losses and is based on sea level conditions.
3. All airflow is rated at lowest voltage. If unit is dual voltage rated, data is based on lowest voltage.
4. A = Standard Rpm/Standard Motor, B = Low Rpm/Standard Motor, C = High Rpm/Standard Motor.

Table 11 — 50VQP240 Blower Performance Data

AIRFLOW (l/s)		EXTERNAL STATIC PRESSURE (Pa)															
		0	25	50	75	100	125	150	175	200	225	250	275	300	325	350	375
2171.2	BkW	—	—	—	0.39	0.45	0.54	0.60	0.69	0.75	0.84	0.90	0.96	1.05	1.11	1.20	1.26
	Sheave/Mtr	—	—	—	B	B	B	A	A	A	A	A	A	C	C	C	C
	RPM	—	—	—	423	466	503	543	580	616	649	682	712	742	770	797	822
	Turns Open	—	—	—	6	5	3.5	6	5	4	3	2	1	4.5	4	3	2.5
2265.6	BkW	—	—	—	0.45	0.54	0.60	0.69	0.75	0.84	0.90	1.05	1.05	1.14	1.20	1.35	1.41
	Sheave/Mtr	—	—	—	B	B	B	A	A	A	A	A	A	C	C	C	C
	RPM	—	—	—	439	481	517	555	592	626	659	691	722	751	779	805	831
	Turns Open	—	—	—	6	4.5	3	5.5	4.5	3.5	2.5	1.5	1	4.5	3.5	3	2
2360.0	BkW	—	—	—	0.51	0.60	0.66	0.75	0.81	0.90	0.96	1.11	1.20	1.26	1.35	1.41	1.50
	Sheave/Mtr	—	—	—	B	B	A	A	A	A	A	A	C	C	C	C	C
	RPM	—	—	—	455	496	530	567	603	637	669	701	730	759	787	813	839
	Turns Open	—	—	—	5.5	4	6	5	4	3	2	1.5	5	4	3.5	2.5	1.5
2454.4	BkW	—	—	0.51	0.60	0.66	0.75	0.81	0.90	0.96	1.11	1.20	1.26	1.35	1.41	1.50	1.56
	Sheave/Mtr	—	—	B	B	B	A	A	A	A	A	A	C	C	C	C	C
	RPM	—	—	430	471	506	544	579	614	647	679	710	739	768	795	822	847
	Turns Open	—	—	6	4.5	3.5	6	5	3.5	3	2	1	5	4	3	2	1.5
2548.8	BkW	—	—	0.60	0.66	0.75	0.81	0.90	0.96	1.11	1.20	1.26	1.35	1.41	1.50	1.56	1.65
	Sheave/Mtr	—	—	B	B	B	A	A	A	A	A	C	C	C	C	C	C
	RPM	—	—	446	486	520	556	591	625	657	689	719	748	776	803	830	855
	Turns Open	—	—	6	4	3	5.5	4.5	3.5	2.5	1.5	5.5	4.5	3.5	3	2	1
2643.2	BkW	—	0.60	0.66	0.75	0.81	0.90	0.96	1.05	1.20	1.26	1.35	1.41	2.00	2.08	2.20	2.40
	Sheave/Mtr	—	B	B	B	A	A	A	A	A	A	C	C	C	C	C	C
	RPM	—	421	462	501	534	569	603	636	668	698	728	757	785	812	838	860
	Turns Open	—	6	5	3.5	6	5	4	3	2	1.5	5	4	2.618	1.87	1.122	0.748
2737.6	BkW	—	0.66	0.75	0.81	0.90	0.96	1.05	1.11	1.26	1.35	1.41	1.50	2.08	2.28	2.40	2.48
	Sheave/Mtr	—	B	B	B	A	A	A	A	A	A	C	C	C	C	C	C
	RPM	—	438	478	515	547	582	615	647	678	708	737	765	793	819	845	868
	Turns Open	—	6	4.5	3	5.5	4.5	3.5	3	2	1	5	4	2.244	1.87	1.122	0.748
2832.0	BkW	—	0.73	0.81	0.88	0.96	1.03	1.11	1.26	1.33	1.41	1.56	1.63	2.28	2.38	2.48	2.68
	Sheave/Mtr	—	B	B	B	A	A	A	A	A	A	C	C	C	C	C	C
	RPM	—	453	491	529	563	595	626	659	689	717	745	774	801	826	851	877
	Turns Open	—	5.5	4	2.5	5.5	4.5	3.5	2.5	1.5	1	4.5	3.5	2.244	1.496	1.122	0.374
2926.4	BkW	0.73	0.81	0.88	0.96	1.03	1.11	1.26	1.33	1.41	1.56	1.63	1.71	2.38	2.48	2.68	2.88
	Sheave/Mtr	B	B	B	A	A	A	A	A	A	C	C	C	C	C	C	C
	RPM	431	469	504	542	575	607	637	670	699	726	754	783	809	834	859	884
	Turns Open	6	4	3.5	6	5	4	3	2	1.5	5.5	4.5	3.5	1.87	1.496	0.748	0.374
3020.8	BkW	0.81	0.88	0.96	1.03	1.11	1.26	1.33	1.41	1.56	1.63	1.71	1.86	2.58	2.68	2.88	3.06
	Sheave/Mtr	B	B	B	A	A	A	A	A	A	C	C	C	C	C	C	C
	RPM	448	485	520	556	588	619	649	680	708	736	765	791	817	841	868	891
	Turns Open	5.5	4.5	3	5.5	4.5	3.5	3	2	1	5	4	3	2.5	1.5	1	0.5
3115.2	BkW	0.88	0.96	1.03	1.11	1.26	1.33	1.41	1.56	1.63	1.71	1.86	1.93	2.68	2.88	2.98	3.08
	Sheave/Mtr	B	B	A	A	A	A	A	A	A	C	C	C	C	C	C	C
	RPM	464	500	537	570	601	631	662	691	718	745	774	799	616	635	654	671
	Turns Open	5	4	6	5	4.5	3.5	2.5	1.5	1	4.5	3.5	3	2	1.5	0.5	0
3209.6	BkW	0.96	1.03	1.11	1.26	1.33	1.41	1.56	1.63	1.71	1.86	1.93	2.00	2.88	2.98	3.08	—
	Sheave/Mtr	B	B	A	A	A	A	A	A	C	C	C	C	C	C	C	—
	RPM	480	515	551	583	613	642	674	701	728	754	783	808	623	641	660	—
	Turns Open	4.5	3	5.5	4.5	4	3	2	1.5	5	4.5	3.5	2.5	2	1	0.5	—
3304.0	BkW	1.03	1.11	1.26	1.33	1.41	1.56	1.63	1.71	1.86	1.93	2.00	2.15	3.08	3.18	3.28	—
	Sheave/Mtr	B	B	A	A	A	A	A	A	C	C	C	C	C	C	C	—
	RPM	496	530	565	596	625	654	684	711	738	766	792	816	629	649	666	—
	Turns Open	4	2.5	5.5	4	3.5	2.5	1.5	1	5	4	3	2.5	1.5	1	0	—
3398.4	BkW	1.11	1.26	1.33	1.41	1.56	1.63	1.71	1.86	2.00	2.08	2.15	2.30	3.18	3.28	3.48	—
	Sheave/Mtr	B	A	A	A	A	A	A	C	C	C	C	C	C	C	C	—
	RPM	511	544	578	608	637	668	695	722	748	776	800	825	635	654	671	—
	Turns Open	3.5	6	5	4	3	2	1.5	5.5	4.5	3.5	3	2	1.5	0.5	0	—
3492.8	BkW	1.26	1.33	1.41	1.56	1.71	1.78	1.86	2.00	2.08	2.15	2.30	2.45	3.38	3.48	—	—
	Sheave/Mtr	B	A	A	A	A	A	A	C	C	C	C	C	C	C	—	—
	RPM	526	561	592	621	649	679	706	732	758	785	809	833	857	882	—	—
	Turns Open	3	5.5	4.5	3.5	3	2	1	5	4	3.5	2.5	2	1	0.5	—	—

LEGEND

A — Standard rpm/Standard Motor
B — Low rpm/Standard Motor
bhp — Brake Horsepower
C — High rpm/Standard Motor
ESP — External Static Pressure

NOTES:
1. Unit is factory shipped with standard static sheave and drive at 2.5 turns open. Other speeds require field selection.
2. For applications requiring higher static pressures, contact your local Carrier representative. Performance data does not include drive losses and is based on sea level conditions.
3. All airflow is rated at lowest voltage. If unit is dual voltage rated, data is based on lowest voltage.
4. A = Standard Rpm/Standard Motor, B = Low Rpm/Standard Motor, C = High Rpm/Standard Motor.

Table 11 — 50VQP240 Blower Performance Data (cont)

AIRFLOW (l/s)		EXTERNAL STATIC PRESSURE (Pa)															
		0	25	50	75	100	125	150	175	200	225	250	275	300	325	350	375
3587.2	BkW	1.33	1.41	1.56	1.63	1.71	1.86	2.00	2.08	2.15	2.30	2.45	2.53	2.60	2.75	—	—
	Sheave/Mtr	A	A	A	A	A	A	A	C	C	C	C	C	C	C	—	—
	RPM	544	575	605	633	661	691	717	742	767	794	818	842	867	890	—	—
	Turns Open	6	5	4	3	2.5	1.5	1	4.5	4	3	2.5	1.5	1	0	—	—
3681.6	BkW	1.41	1.56	1.71	1.78	1.86	2.00	2.15	2.23	2.30	2.45	2.60	2.68	2.75	2.90	—	—
	Sheave/Mtr	A	A	A	A	A	A	C	C	C	C	C	C	C	C	—	—
	RPM	555	589	618	646	676	702	728	753	779	803	827	850	875	898	—	—
	Turns Open	5.5	4.5	3.5	2.5	2	1	5	4.5	3.5	2.5	2	1	0.5	0	—	—
3776.0	BkW	1.56	1.63	1.71	1.86	2.00	2.15	2.23	2.30	2.45	2.60	2.68	2.75	2.90	3.05	—	—
	Sheave/Mtr	A	A	A	A	A	A	C	C	C	C	C	C	C	C	—	—
	RPM	572	601	630	657	686	712	737	762	789	812	836	859	883	905	—	—
	Turns Open	5	4	3	2.5	1.5	1	4.5	4	3	2.5	1.5	1	0.5	0	—	—
3870.4	BkW	1.71	1.78	1.86	2.00	2.15	2.23	2.30	2.45	2.60	2.75	2.83	2.90	3.05	—	—	—
	Sheave/Mtr	A	A	A	A	A	C	C	C	C	C	C	C	C	—	—	—
	RPM	589	617	645	672	700	726	751	775	801	824	847	872	894	—	—	—
	Turns Open	4.5	3.5	3	2	1	5	4.5	3.5	2.5	2	1.5	0.5	0	—	—	—
3964.8	BkW	1.86	1.93	2.00	2.15	2.30	2.38	2.45	2.60	2.75	2.99	3.05	3.13	3.20	—	—	—
	Sheave/Mtr	A	A	A	A	A	C	C	C	C	C	C	C	C	—	—	—
	RPM	605	633	660	689	714	739	763	790	813	836	858	882	904	—	—	—
	Turns Open	4	3	2.5	1.5	1	5	4	3	2.5	1.5	1	0.5	0	—	—	—
4059.2	BkW	1.93	2.00	2.15	2.30	2.45	2.53	2.60	2.75	2.99	3.05	3.20	3.35	—	—	—	—
	Sheave/Mtr	A	A	A	A	C	C	C	C	C	C	C	C	—	—	—	—
	RPM	621	649	675	703	728	752	776	802	827	847	869	893	—	—	—	—
	Turns Open	3.5	2.5	2	1	5	4.5	3.5	2.5	2	1.5	1	0	—	—	—	—
4153.6	BkW	2.08	2.15	2.30	2.45	2.60	2.75	2.83	2.99	3.05	3.20	3.35	3.50	—	—	—	—
	Sheave/Mtr	A	A	A	C	C	C	C	C	C	C	C	C	—	—	—	—
	RPM	637	664	690	717	742	766	791	814	836	858	882	904	—	—	—	—
	Turns Open	3	2	1.5	5.5	4.5	4	3	2.5	2	1	0.5	0	—	—	—	—
4248.0	BkW	2.23	2.30	2.45	2.60	2.75	2.90	3.05	3.13	3.20	3.35	3.50	—	—	—	—	—
	Sheave/Mtr	A	A	A	C	C	C	C	C	C	C	C	—	—	—	—	—
	RPM	653	679	707	731	755	779	804	826	848	870	893	—	—	—	—	—
	Turns Open	2.5	1.5	1	5	4	3.5	3	2	1.5	1	0	—	—	—	—	—

LEGEND

A — Standard rpm/Standard Motor
B — Low rpm/Standard Motor
bhp — Brake Horsepower
C — High rpm/Standard Motor
ESP — External Static Pressure

NOTES:
1. Unit is factory shipped with standard static sheave and drive at 2.5 turns open. Other speeds require field selection.
2. For applications requiring higher static pressures, contact your local Carrier representative. Performance data does not include drive losses and is based on sea level conditions.
3. All airflow is rated at lowest voltage. If unit is dual voltage rated, data is based on lowest voltage.
4. A = Standard Rpm/Standard Motor, B = Low Rpm/Standard Motor, C = High Rpm/Standard Motor.

Table 12 — 50VQP300 Blower Performance Data

AIRFLOW (l/s)		EXTERNAL STATIC PRESSURE (Pa)															
		0	25	50	75	100	125	150	175	200	225	250	275	300	325	350	375
2643.2	BkW	—	—	—	—	—	0.69	0.75	0.84	0.99	1.05	1.14	1.29	1.44	1.59	1.74	1.88
	Sheave/Mtr	—	—	—	—	—	B	B	B	A	A	A	A	A	A	C	C
	RPM	—	—	—	—	—	533	572	606	640	676	712	746	783	821	859	901
	Turns Open	—	—	—	—	—	5.5	4	3	6	4.5	3.5	2	1	0	1.5	0.5
2737.6	BkW	—	—	—	—	—	0.75	0.84	0.90	1.05	1.14	1.20	1.35	1.50	1.62	1.80	1.94
	Sheave/Mtr	—	—	—	—	—	B	B	B	A	A	A	A	A	C	C	C
	RPM	—	—	—	—	—	544	582	619	652	686	719	754	789	823	860	902
	Turns Open	—	—	—	—	—	5	4	2.5	5.5	4	3	2	0.5	2.5	1.5	0
2832.0	BkW	—	—	—	—	0.75	0.84	0.90	1.05	1.14	1.20	1.35	1.50	1.59	1.65	1.88	2.03
	Sheave/Mtr	—	—	—	—	B	B	B	B	A	A	A	A	A	C	C	C
	RPM	—	—	—	—	521	558	595	628	663	697	728	762	796	828	863	903
	Turns Open	—	—	—	—	6	4.5	3	2	5	4	2.5	1.5	0.5	2	1	0
2926.4	BkW	—	—	—	—	0.84	0.90	1.05	1.11	1.20	1.29	1.44	1.56	1.65	1.80	1.94	2.09
	Sheave/Mtr	—	—	—	—	B	B	B	A	A	A	A	A	A	C	C	C
	RPM	—	—	—	—	536	572	608	640	674	705	737	769	799	832	866	904
	Turns Open	—	—	—	—	5.5	4	3	6	4.5	3.5	2.5	1.5	0	2	1	0
3020.8	BkW	—	—	—	—	0.90	0.99	1.11	1.20	1.35	1.41	1.50	1.71	1.80	1.94	2.09	—
	Sheave/Mtr	—	—	—	—	B	B	B	A	A	A	A	A	A	C	C	—
	RPM	—	—	—	—	548	585	618	652	685	715	747	778	807	836	868	—
	Turns Open	—	—	—	—	5	3.5	2.5	5.5	4	3	2	1	0	2	1	—
3115.2	BkW	—	—	—	0.90	0.96	1.05	1.20	1.29	1.41	1.56	1.65	1.80	2.48	2.68	2.88	—
	Sheave/Mtr	—	—	—	B	B	B	A	A	A	A	A	A	C	C	C	—
	RPM	—	—	—	522	562	599	631	664	694	725	756	784	815	845	874	—
	Turns Open	—	—	—	6	4.5	3	6	5	4	3	1.5	1	2	1	0.5	—
3209.6	BkW	—	—	—	0.96	1.05	1.14	1.26	1.35	1.50	1.65	1.71	1.86	2.68	2.88	3.08	—
	Sheave/Mtr	—	—	—	B	B	B	A	A	A	A	A	A	C	C	C	—
	RPM	—	—	—	537	576	612	643	676	705	736	763	793	823	850	880	—
	Turns Open	—	—	—	5.5	4	2.5	5.5	4.5	3.5	2.5	1.5	0.5	2	1	0.5	—
3304.0	BkW	—	—	—	1.05	1.14	1.20	1.35	1.50	1.56	1.71	1.86	2.00	2.80	3.00	3.20	—
	Sheave/Mtr	—	—	—	B	B	B	A	A	A	A	A	A	C	C	C	—
	RPM	—	—	—	551	589	622	655	685	716	746	776	802	829	858	886	—
	Turns Open	—	—	—	5	3.5	2	5	4	3	2	1	0	1.5	1	0	—
3398.4	BkW	—	—	1.05	1.11	1.20	1.35	1.50	1.56	1.71	1.86	1.94	2.09	2.88	3.08	3.28	—
	Sheave/Mtr	—	—	B	B	B	A	A	A	A	A	A	A	C	C	C	—
	RPM	—	—	526	565	600	634	665	696	727	754	783	809	837	865	891	—
	Turns Open	—	—	6	4.5	3	6	5	4	3	2	1	0	1.5	1	0	—
3492.8	BkW	—	—	1.11	1.26	1.35	1.41	1.56	1.71	1.86	1.94	2.00	2.15	3.08	3.28	3.48	—
	Sheave/Mtr	—	—	B	B	B	A	A	A	A	A	A	C	C	C	C	—
	RPM	—	—	541	579	613	647	677	707	737	764	793	818	846	871	898	—
	Turns Open	—	—	5	4	2.5	5.5	4.5	3.5	2.5	1.5	0.5	2.5	1.5	0.5	0	—
3587.2	BkW	—	—	1.26	1.33	1.41	1.56	1.71	1.86	1.93	2.00	2.15	2.30	3.28	3.48	3.68	—
	Sheave/Mtr	—	—	B	B	B	A	A	A	A	A	A	C	C	C	C	—
	RPM	—	—	554	591	626	659	688	718	746	774	802	829	640	657	677	—
	Turns Open	—	—	5	3.5	2	5	4	3	2	1	0	2	1.5	0.5	0	—
3681.6	BkW	—	1.18	1.26	1.41	1.56	1.71	1.78	1.86	2.00	2.15	2.30	2.45	3.48	3.68	—	—
	Sheave/Mtr	—	B	B	B	A	A	A	A	A	A	A	C	C	C	—	—
	RPM	—	531	569	605	639	669	702	729	757	785	811	838	645	663	—	—
	Turns Open	—	6	4.5	3	6	5	3.5	3	2	1	0	2	1	0.5	—	—
3776.0	BkW	—	1.26	1.41	1.56	1.71	1.78	1.86	2.00	2.15	2.30	2.45	2.53	3.48	3.68	—	—
	Sheave/Mtr	—	B	B	B	A	A	A	A	A	A	C	C	C	C	—	—
	RPM	—	545	582	618	651	683	710	739	767	794	821	845	651	669	—	—
	Turns Open	—	5	4	2.5	5.5	4.5	3.5	2.5	1.5	0.5	2.5	1.5	1	0	—	—
3870.4	BkW	1.26	1.41	1.56	1.63	1.71	1.86	2.00	2.15	2.30	2.45	2.53	2.60	3.68	3.88	—	—
	Sheave/Mtr	B	B	B	B	A	A	A	A	A	A	C	C	C	C	—	—
	RPM	523	560	596	631	661	692	722	750	778	804	831	854	657	676	—	—
	Turns Open	6	4.5	3.5	2	5	4	3	2	1	0	2	1.5	0.5	0	—	—

LEGEND

A — Standard rpm/Standard Motor
B — Low rpm/Standard Motor
bhp — Brake Horsepower
C — High rpm/Standard Motor
E — High rpm/Large Motor
ESP — External Static Pressure

NOTES:
1. Unit is factory shipped with standard static sheave and drive at 2.5 turns open. Other speeds require field selection.
2. For applications requiring higher static pressures, contact your local Carrier representative. Performance data does not include drive losses and is based on sea level conditions.
3. All airflow is rated at lowest voltage. If unit is dual voltage rated, data is based on lowest voltage.
4. A = Standard Rpm/Standard Motor, B = Low Rpm/Standard Motor, C = High Rpm/Standard Motor, E = High Rpm/Large Motor.

Table 12 — 50VQP300 Blower Performance Data (cont)

AIRFLOW (l/s)		EXTERNAL STATIC PRESSURE (Pa)															
		0	25	50	75	100	125	150	175	200	225	250	275	300	325	350	375
3964.8	BkW	1.41	1.48	1.56	1.71	1.86	2.00	2.15	2.30	2.38	2.45	2.60	2.75	3.88	4.08	—	—
	Sheave/Mtr	B	B	B	A	A	A	A	A	A	A	C	C	C	C	—	—
	RPM	538	574	609	640	673	703	733	761	788	812	838	863	888	912	—	—
	Turns Open	5.5	4	3	6	4.5	3.5	2.5	1.5	1	0	2	1	0.5	0	—	—
4059.2	BkW	1.41	1.56	1.71	1.86	2.00	2.15	2.30	2.38	2.45	2.60	2.75	2.90	3.05	—	—	—
	Sheave/Mtr	B	B	B	A	A	A	A	A	A	C	C	C	C	—	—	—
	RPM	553	588	620	653	685	715	744	771	796	822	847	872	896	—	—	—
	Turns Open	5	3.5	2.5	5.5	4	3	2.5	1.5	0.5	2.5	1.5	1	0	—	—	—
4153.6	BkW	1.56	1.71	1.86	2.00	2.15	2.30	2.38	2.45	2.60	2.75	2.90	3.05	3.20	—	—	—
	Sheave/Mtr	B	B	A	A	A	A	A	A	A	C	C	C	C	—	—	—
	RPM	568	602	633	666	697	726	755	782	806	832	857	881	904	—	—	—
	Turns Open	4.5	3	6	5	4	3	2	1	0	2	1.5	0.5	0	—	—	—
4248.0	BkW	1.71	1.80	1.94	2.09	2.24	2.39	2.54	2.69	2.84	2.99	3.14	3.29	—	—	—	—
	Sheave/Mtr	B	B	A	A	A	A	A	A	C	C	C	C	—	—	—	—
	RPM	581	613	646	678	706	735	763	791	817	842	867	889	—	—	—	—
	Turns Open	4	2.5	5.5	4.5	3.5	2.5	1.5	1	2.5	2	1	0	—	—	—	—
4342.4	BkW	1.78	1.86	2.00	2.15	2.30	2.45	2.60	2.75	2.90	3.05	3.20	3.35	—	—	—	—
	Sheave/Mtr	B	B	A	A	A	A	A	A	C	C	C	C	—	—	—	—
	RPM	598	623	656	687	715	744	772	799	825	850	872	896	—	—	—	—
	Turns Open	3.5	2.5	5	4	3	2.5	1	0.5	2	1.5	1	0	—	—	—	—
4436.8	BkW	1.86	2.00	2.15	2.30	2.45	2.60	2.75	2.90	3.05	3.20	3.35	—	—	—	—	—
	Sheave/Mtr	B	A	A	A	A	A	A	A	C	C	C	—	—	—	—	—
	RPM	605	637	666	697	727	755	783	809	835	858	882	—	—	—	—	—
	Turns Open	3	6	5	4	3	2	1	0	2	1.5	0.5	—	—	—	—	—
4531.2	BkW	2.00	2.15	2.30	2.45	2.60	2.75	2.90	3.05	3.20	3.35	3.50	—	—	—	—	—
	Sheave/Mtr	B	A	A	A	A	A	A	C	C	C	C	—	—	—	—	—
	RPM	618	647	678	708	738	766	793	819	844	867	891	—	—	—	—	—
	Turns Open	2.5	5.5	4.5	3.5	2.5	1.5	0.5	2.5	1.5	1	0.5	—	—	—	—	—
4625.6	BkW	2.15	2.30	2.45	2.60	2.75	2.90	3.05	3.20	3.35	3.50	3.65	—	—	—	—	—
	Sheave/Mtr	A	A	A	A	A	A	A	C	C	C	C	—	—	—	—	—
	RPM	631	662	690	720	749	777	803	827	852	877	900	—	—	—	—	—
	Turns Open	6	5	4	3	2	1	0	2	1.5	0.5	0	—	—	—	—	—
4720.0	BkW	2.30	2.45	2.60	2.75	2.90	3.05	3.20	3.35	3.50	3.65	—	—	—	—	—	—
	Sheave/Mtr	A	A	A	A	A	A	A	C	C	C	—	—	—	—	—	—
	RPM	642	672	702	731	760	785	811	837	862	886	—	—	—	—	—	—
	Turns Open	6	4.5	3.5	2.5	2	1	0	2	1	0.5	—	—	—	—	—	—
4814.4	BkW	2.45	2.60	2.75	2.90	3.05	3.20	3.35	3.50	3.65	3.80	—	—	—	—	—	—
	Sheave/Mtr	A	A	A	A	A	A	C	C	C	E	—	—	—	—	—	—
	RPM	655	685	714	743	769	798	822	847	872	896	—	—	—	—	—	—
	Turns Open	5.5	4	3	2	1.5	0.5	2.5	1.5	0.5	0	—	—	—	—	—	—
4908.8	BkW	2.60	2.75	2.90	3.05	3.20	3.35	3.50	3.65	3.80	—	—	—	—	—	—	—
	Sheave/Mtr	A	A	A	A	A	A	C	C	E	—	—	—	—	—	—	—
	RPM	668	697	726	752	782	806	832	857	882	—	—	—	—	—	—	—
	Turns Open	5	4	2.5	2	1	0	2	1	0.5	—	—	—	—	—	—	—
5003.2	BkW	2.75	2.90	3.05	3.20	3.35	3.50	3.65	3.80	3.95	—	—	—	—	—	—	—
	Sheave/Mtr	A	A	A	A	A	C	C	E	E	—	—	—	—	—	—	—
	RPM	680	709	737	763	790	817	842	867	889	—	—	—	—	—	—	—
	Turns Open	4.5	3.5	2.5	1.5	0.5	2.5	1.5	1	0	—	—	—	—	—	—	—
5097.6	BkW	2.90	3.05	3.20	3.35	3.50	3.65	3.80	3.95	4.10	—	—	—	—	—	—	—
	Sheave/Mtr	A	A	A	A	A	C	E	E	E	—	—	—	—	—	—	—
	RPM	691	717	745	772	799	825	850	873	897	—	—	—	—	—	—	—
	Turns Open	4	3	2	1	0	2	1.5	0.5	0	—	—	—	—	—	—	—
5192.0	BkW	3.05	3.20	3.35	3.50	3.65	3.80	3.95	4.10	—	—	—	—	—	—	—	—
	Sheave/Mtr	A	A	A	A	A	E	E	E	—	—	—	—	—	—	—	—
	RPM	704	729	756	783	810	836	859	883	—	—	—	—	—	—	—	—
	Turns Open	3.5	2.5	1.5	1	0	1.5	1	0.5	—	—	—	—	—	—	—	—

LEGEND

A — Standard rpm/Standard Motor
B — Low rpm/Standard Motor
bhp — Brake Horsepower
C — High rpm/Standard Motor
E — High rpm/Large Motor
ESP — External Static Pressure

NOTES:
1. Unit is factory shipped with standard static sheave and drive at 2.5 turns open. Other speeds require field selection.
2. For applications requiring higher static pressures, contact your local Carrier representative. Performance data does not include drive losses and is based on sea level conditions.
3. All airflow is rated at lowest voltage. If unit is dual voltage rated, data is based on lowest voltage.
4. A = Standard Rpm/Standard Motor, B = Low Rpm/Standard Motor, C = High Rpm/Standard Motor, E = High Rpm/Large Motor.

FIELD SELECTABLE INPUTS

Jumpers and DIP (dual in-line package) switches on the control board are used to customize unit operation and can be configured in the field.

IMPORTANT: Jumpers and DIP switches should only be clipped when power to control board has been turned off.

Complete C Control Jumper Settings (See Fig. 27)

WATER COIL FREEZE PROTECTION (FP1) LIMIT SETTING — Select jumper 3, (JW3-FP1 Low Temp) to choose FP1 limit of –12.2 C or –1.1 C. To select –1.1 C as the limit, DO NOT clip the jumper. To select –12.2 C as the limit, clip the jumper.

AIR COIL FREEZE PROTECTION (FP2) LIMIT SETTING — Select jumper 2 (JW2-FP2 Low Temp) to choose FP2 limit of –12.2 C or –1.1 C. To select –1.1 C as the limit, DO NOT clip the jumper. To select –12.2 C as the limit, clip the jumper.

ALARM RELAY SETTING — Select jumper 1 (JW1-AL2 Dry) for connecting alarm relay terminal (AL2) to 24 vac (R) or to remain as a dry contact (no connection). To connect AL2 to R, do not clip the jumper. To set as dry contact, clip the jumper.

Complete C Control DIP Switches — The Complete C control has 1 DIP switch block with five switches. See Fig. 27.

PERFORMANCE MONITOR (PM) — DIP switch 1 will enable or disable this feature. To enable the PM, set the switch to ON. To disable the PM, set the switch to OFF.

STAGE 2 — DIP switch 2 will enable or disable compressor delay. Set DIP switch to OFF for stage 2 in which the compressor will have a 3-second delay before energizing.

NOTE: The alarm relay will not cycle during Test mode if switch is set to OFF, stage 2.

DIP SWITCH 3 — not used.

DIP SWITCH 4 — not used.

DIP SWITCH 5 — DIP switch 5 is used to initiate 1 or 3 tries for the FP1 fault. If water freeze protection for the water coil then DIP switch 5 can be set to lock out on the FP1 fault after one try.

Deluxe D Control Jumper Settings (See Fig. 28)

WATER COIL FREEZE PROTECTION (FP1) LIMIT SETTING — Select jumper 3, (JW3-FP1 Low Temp) to choose FP1 limit of –12.2 C or –1.1 C. To select –1.1 C as the limit, DO NOT clip the jumper. To select –12.2 C as the limit, clip the jumper.

AIR COIL FREEZE PROTECTION (FP2) LIMIT SETTING — Select jumper 2 (JW2-FP2 Low Temp) to choose FP2 limit of –12.2 C or –1.1 C. To select –1.1 C as the limit, DO NOT clip the jumper. To select –12.2 C as the limit, clip the jumper.

ALARM RELAY SETTING — Select jumper 4 (JW4-AL2 Dry) for connecting alarm relay terminal (AL2) to 24 vac (R) or to remain as a dry contact (no connection). To connect AL2 to R, do not clip the jumper. To set as dry contact, clip the jumper.

LOW PRESSURE SETTING — The Deluxe D Control can be configured for Low Pressure Setting (LP). Select jumper 1 (JW1-LP Norm Open) for choosing between low pressure input normally opened or closed. To configure for normally closed operation, do not clip the jumper. To configure for normally open operation, clip the jumper.

Deluxe D Control DIP Switches — The Deluxe D control has 2 DIP switch blocks. Each DIP switch block has 8 switches and is labeled either S1 or S2 on the circuit board. See Fig. 28.

DIP SWITCH BLOCK 1 (S1) — This set of switches offers the following options for Deluxe D control configuration:

Performance Monitor (PM) — Set switch 1 to enable or disable performance monitor. To enable the PM, set the switch to ON. To disable the PM, set the switch to OFF.

Compressor Relay Staging Operation — Switch 2 will enable or disable compressor relay staging operation. The compressor relay can be set to turn on with stage 1 or stage 2 call from the thermostat. This setting is used with dual stage units (units with 2 compressors and 2 Deluxe D controls) or in master/slave applications. In master/slave applications, each compressor and fan will stage according to its switch 2 setting. If switch is set to stage 2, the compressor will have a 3-second delay before energizing during stage 2 demand.

NOTE: If DIP switch is set for stage 2, the alarm relay will not cycle during Test mode.

Heating/Cooling Thermostat Type — Switch 3 provides selection of thermostat type. Heat pump or heat/cool thermostats can be selected. Select OFF for heat/cool thermostats. When in heat/cool mode, Y1 is used for cooling stage 1, Y2 is used for cooling stage 2, W1 is used for heating stage 1 and O/W2 is used for heating stage 2. Select ON for heat pump applications. In heat pump mode, Y1 used is for compressor stage 1, Y2 is used for compressor stage 2, W1 is used for heating stage 3 or emergency heat, and O/W2 is used for RV (heating or cooling) depending upon switch 4 setting.

O/B Thermostat Type — Switch 4 provides selection for heat pump O/B thermostats. O is cooling output. B is heating output. Select ON for heat pumps with O output. Select OFF for heat pumps with B output.

Dehumidification Fan Mode — Switch 5 provides selection of normal or dehumidification fan mode. Select OFF for dehumidification mode. The fan speed relay will remain OFF during cooling stage 2. Select ON for normal mode. The fan speed relay will turn on during cooling stage 2 in normal mode.

Switch 6 — Not used.

Boilerless Operation — Switch 7 provides selection of boilerless operation and works in conjunction with switch 8. In boilerless operation mode, only the compressor is used for heating when FP1 is above the boilerless changeover temperature set by switch 8 below. Select ON for normal operation or select OFF for boilerless operation.

Boilerless Changeover Temperature — Switch 8 on S1 provides selection of boilerless changeover temperature set point. Select OFF for set point of 10.0 C or select ON for set point of 4.4 C.

If switch 8 is set for 10.0 C, then the compressor will be used for heating as long as the FP1 is above 10.0 C. The compressor will not be used for heating when the FP1 is below 10.0 C and the compressor will operate in emergency heat mode, staging on EH1 and EH2 to provide heat. If a thermal switch is being used instead of the FP1 thermistor, only the compressor will be used for heating mode when the FP1 terminals are closed. If the FP1 terminals are open, the compressor is not used and the control goes into emergency heat mode.

DIP SWITCH BLOCK 2 (S2) — This set of DIP switches is used to configure accessory relay options. See Fig. 28.

Switches 1 to 3 — These DIP switches provide selection of Accessory 1 relay options. See Table 13 for DIP switch combinations.

Switches 4 to 6 — These DIP switches provide selection of Accessory 2 relay options. See Table 14 for DIP switch combinations.

Auto Dehumidification Mode or High Fan Mode — Switch 7 provides selection of auto dehumidification fan mode or high fan mode. In auto dehumidification fan mode the fan speed relay will remain off during cooling stage 2 if terminal H is active. In high fan mode, the fan enable and fan speed relays will turn on when terminal H is active. Set the switch to ON for auto dehumidification fan mode or to OFF for high fan mode.

Switch 8 — Not used.

Table 13 — DIP Switch Block S2 — Accessory 1 Relay Options

ACCESSORY 1 RELAY OPTIONS	DIP SWITCH POSITION		
	1	2	3
Cycle with Fan	On	On	On
Digital NSB	Off	On	On
Water Valve — Slow Opening	On	Off	On
OAD	On	On	Off

LEGEND
NSB — Night Setback
OAD — Outside Air Damper

NOTE: All other DIP switch combinations are invalid.

Table 14 — DIP Switch Block S2 — Accessory 2 Relay Options

ACCESSORY 2 RELAY OPTIONS	DIP SWITCH POSITION		
	4	5	6
Cycle with Fan	On	On	On
Digital NSB	Off	On	On
Water Valve — Slow Opening	On	Off	On
OAD	On	On	Off

LEGEND
NSB — Night Setback
OAD — Outside Air Damper

NOTE: All other switch combinations are invalid.

Deluxe D Control Accessory Relay Configurations — The following accessory relay settings are applicable for both Deluxe D controls only:

CYCLE WITH FAN — In this configuration, the relay will be ON any time the Fan Enable relay is on.

CYCLE WITH COMPRESSOR — In this configuration, the relay will be ON any time the Compressor relay is on.

DIGITAL NIGHT SET BACK (NSB) — In this configuration, the relay will be ON if the NSB input is connected to ground C.

NOTE: If there are no relays configured for digital NSB, then the NSB and override (OVR) inputs are automatically configured for mechanical operation.

MECHANICAL NIGHT SET BACK — When NSB input is connected to ground C, all thermostat inputs are ignored. A thermostat set back heating call will then be connected to the OVR input. If OVR input becomes active, then the Deluxe D control will enter Night Low Limit (NLL) staged heating mode. The NLL staged heating mode will then provide heating during the NSB period.

WATER VALVE (SLOW OPENING) — If relay is configured for Water Valve (slow opening), the relay will start 60 seconds prior to starting compressor relay.

OUTSIDE AIR DAMPER (OAD) — If relay is configured for OAD, the relay will normally be ON any time the Fan Enable relay is energized. The relay will not start for 30 minutes following a return to normal mode from NSB, when NSB is no longer connected to ground C. After 30 minutes, the relay will start if the Fan Enable is set to ON.

⚠ CAUTION

To avoid equipment damage, DO NOT leave system filled in a building without heat during the winter unless antifreeze is added to system water. Condenser coils never fully drain by themselves and will freeze unless winterized with antifreeze.

START-UP

Use the procedure outlined below to initiate proper unit start-up.

NOTE: This equipment is designed for indoor installation only.

Operating Limits

ENVIRONMENT — This equipment is designed for indoor installation ONLY. Extreme variations in temperature, humidity and corrosive water or air will adversely affect the unit performance, reliability and service life.

POWER SUPPLY — A voltage variation of ± 10% of nameplate utilization voltage is acceptable.

UNIT STARTING CONDITIONS — All units start and operate in an ambient of 7.2 C with entering-air at 4.4 C, entering-water at –6.7 C and with both air and water at the flow rates used.

NOTE: These operating conditions are not normal or continuous operating conditions. It is assumed that such a start-up is for the purpose of bringing the building space up to occupancy temperature.

⚠ WARNING

When the disconnect switch is closed, high voltage is present in some areas of the electrical panel. Exercise caution when working with the energized equipment.

Start Up System

1. Restore power to system.
2. Turn thermostat fan position to ON. Blower should start.
3. Balance airflow at registers.
4. Adjust all valves to the full open position and turn on the line power to all heat pump units.
5. Operate unit in the cooling cycle. Room temperature should be approximately 10 to 38 C dry bulb. Loop water temperature entering the heat pumps should be between 10 and 49 F.

NOTE: Three factors determine the operating limits of a unit: (1) entering-air temperature, (2) water temperature and (3) ambient temperature. Whenever any of these factors are at a minimum or maximum level, the other two factors must be at a normal level to ensure proper unit operation. See Table 15.

Scroll Compressor Rotation — It is important to be certain compressor is rotating in the proper direction. To determine whether or not compressor is rotating in the proper direction:

1. Connect service gages to suction and discharge pressure fittings.
2. Energize the compressor.
3. The suction pressure should drop and the discharge pressure should rise, as is normal on any start-up.

Table 15 — 50VQP Unit Operating Limits

AIR LIMITS	COOLING (C)	HEATING (C)
Minimum Ambient Air db	10	10
Rated Ambient Air db	27	20
Maximum Ambient Air db	38	29
Minimum Return Air db/wb	18/15	16
Maximum Return Air db/wb	43/28	29
WATER LIMITS		
Standard Unit		
Minimum Entering Water*	10	16
Maximum Entering Water	49	43
Extended Range Unit†		
Minimum Entering Water*	–1	–6.7
Maximum Entering Water	49	43

LEGEND

db — Dry Bulb
wb — Wet Bulb

*Requires optional insulation package when operating below the dew point.
†With antifreeze, optional extended range insulation and low temperature cutout jumper clipped for antifreeze.

If the suction pressure does not drop and the discharge pressure does not rise to normal levels:

1. Turn off power to the unit. Install disconnect tag.
2. Reverse any two of the unit power leads.
3. Reapply power to the unit and verify pressures are correct.

The suction and discharge pressure levels should now move to their normal start-up levels.

When the compressor is rotating in the wrong direction, the unit makes an elevated level of noise and does not provide cooling.

After a few minutes of reverse operation, the scroll compressor internal overload protection will open, thus activating the unit lockout. This requires a manual reset. To reset, turn the thermostat on and then off.

NOTE: There is a 5-minute time delay before the compressor will start.

Unit Start-Up Cooling Mode

1. Adjust the unit thermostat to the warmest position. Slowly reduce the thermostat position until the compressor activates.
2. Check for cool air delivery at unit grille a few minutes after the unit has begun to operate.
3. Verify that the compressor is on and that the water flow rate is correct by measuring pressure drop through the heat exchanger using P/T plugs. See Table 16. Check the elevation and cleanliness of the condensate lines; any dripping could be a sign of a blocked line. Be sure the condensate trap includes a water seal.
4. Check the temperature of both supply and discharge water. If temperature is within acceptable range, proceed. If temperature is outside the range, check the cooling refrigerant pressures.
5. Check air temperature drop across the coil when compressor is operating. Air temperature drop should be between 8 and 14 C.

Table 16 — Water Temperature Change Through Heat Exchanger

WATER FLOW RATE (GPM)	COOLING RISE (C)		HEATING DROP (C)	
	Min	Max	Min	Max
For Closed Loop: Ground Source or Cooling/Boiler Systems at 3.9 L/m per kW	5.0	6.7	2.2	6.1
For Open Loop: Ground Water Systems at 2.0 L/m per kW	10.0	12.8	3.9	11.1

Unit Start-Up Heating Mode

NOTE: Operate the unit in heating cycle after checking the cooling cycle. Allow 5 minutes between tests for the pressure or reversing valve to equalize.

1. Turn thermostat to lowest setting and set thermostat switch to HEAT position.
2. Slowly turn the thermostat to a higher temperature until the compressor activates.
3. Check for warm air delivery at the unit grille within a few minutes after the unit has begun to operate.
4. Check the temperature of both supply and discharge water. If temperature is within acceptable range, proceed. If temperature is outside the range, check the heating refrigerant pressures.
5. Once the unit has begun to run, check for warm air delivery at the unit grille.
6. Check air temperature rise across the coil when compressor is operating. Air temperature rise should be between 11° C and 17° C after 15 minutes at load.
7. Check for vibration, noise and water leaks.

Flow Regulation — Flow regulation can be accomplished by two methods. Most water control valves have a flow adjustment built into the valve. By measuring the pressure drop through the unit heat exchanger, the flow rate can be determined using Table 17. Adjust the water control valve until the flow of 0.09 to 0.13 L/s is achieved. Since the pressure constantly varies, two pressure gages may be needed in some applications.

An alternative method is to install a flow control device. These devices are typically an orifice of plastic material designed to allow a specified flow rate that are mounted on the outlet of the water control valve. Occasionally these valves produce a velocity noise that can be reduced by applying some back pressure. To accomplish this, slightly close the leaving isolation valve of the well water setup.

⚠ WARNING

To avoid possible injury or death due to electrical shock, open the power supply disconnect switch and secure it in an open position before flushing system.

Flushing — Once the piping is complete, final purging and loop charging is needed. A flush cart pump of at least 1.5 hp is needed to achieve adequate flow velocity in the loop to purge air and dirt particles from the loop. Flush the loop in both directions with a high volume of water at a high velocity. Follow the steps below to properly flush the loop:

1. Verify power is off.
2. Fill loop with water from hose through flush cart before using flush cart pump to ensure an even fill. Do not allow the water level in the flush cart tank to drop below the pump inlet line to prevent air from filling the line.
3. Maintain a fluid level in the tank above the return tee to avoid air entering back into the fluid.
4. Shutting off the return valve that connects into the flush cart reservoir will allow 345 kPa surges to help purge air pockets. This maintains the pump at 345 kPa.
5. To purge, keep the pump at 345 kPa until maximum pumping pressure is reached.
6. Open the return valve to send a pressure surge through the loop to purge any air pockets in the piping system.
7. A noticeable drop in fluid level will be seen in the flush cart tank. This is the only indication of air in the loop.

Table 17 — Coaxial Water Pressure Drop

50VQP UNIT SIZE	L/s	PRESSURE DROP (kPa)			
		–1 C	10 C	21 C	32 C
084	0.66	16.5	13.8	8.3	7.6
	1.00	37.9	31.7	23.4	20.7
	1.32	63.4	54.4	42.7	39.3
096	0.76	26.2	21.4	15.8	13.8
	1.13	55.1	46.9	36.5	33.1
	1.51	89.6	77.2	63.4	59.3
120	0.95	14.5	11.7	8.3	6.9
	1.42	36.5	30.3	24.1	22.1
	1.89	64.8	55.8	46.2	42.7
150	1.20	18.6	14.5	10.3	9.0
	1.76	42.7	35.8	28.2	25.5
	2.39	75.8	65.5	53.1	49.6
168	1.32	18.6	15.2	9.6	8.3
	1.98	42.0	35.8	26.2	23.4
	2.65	71.7	61.3	47.5	44.1
192	1.51	28.9	24.1	17.9	15.8
	2.27	62.0	52.4	41.3	37.9
	1.89	100.6	86.8	71.0	66.1
240	2.84	16.5	13.1	9.0	7.6
	3.78	40.7	33.8	26.9	24.8
	2.39	72.3	63.4	51.7	48.2
300	3.53	21.4	16.5	11.7	10.3
	4.79	48.2	40.7	31.7	28.9
	3.78	85.4	73.7	59.9	55.8

NOTE: If air is purged from the system while using a 250 mm PVC flush tank, only a 25 to 50 mm level drop will be noticed since liquids are incompressible. If the level drops more than this, flushing should continue since air is still being compressed in the loop. If level is less than 25 to 50 mm, reverse the flow.

8. Repeat this procedure until all air is purged.
9. Restore power.

Antifreeze may be added before, during or after the flushing process. However, depending on when it is added in the process, it can be wasted. Refer to the Antifreeze section for more detail.

Loop static pressure will fluctuate with the seasons. Pressures will be higher in the winter months than during the warmer months. This fluctuation is normal and should be considered when charging the system initially. Run the unit in either heating or cooling for several minutes to condition the loop to a homogenous temperature.

When complete, perform a final flush and pressurize the loop to a static pressure of 275 to 350 kPa for winter months or 100 to 140 kPa for summer months.

After pressurization, be sure to remove the plug from the end of the loop pump motor(s) to allow trapped air to be discharged and to ensure the motor housing has been flooded. Be sure the loop flow center provides adequate flow through the unit by checking pressure drop across the heat exchanger.

Antifreeze — In areas where entering loop temperatures drop below 4.4 C or where piping will be routed through areas subject to freezing, antifreeze is needed.

Alcohols and glycols are commonly used as antifreeze agents. Freeze protection should be maintained to 8.3° C below the lowest expected entering loop temperature. For example, if the lowest expected entering loop temperature is –1.1 C, the leaving loop temperature would be –5.6 to –3.9 C. Therefore, the freeze protection should be at –9.4 C (–1.1 C – 8.3 C = –9.4 C) Calculate the total volume of fluid in the piping system. See Table 18. Use the percentage by volume in Table 19 to determine the amount of antifreeze to use. Antifreeze concentration should be checked from a well mixed sample using a hydrometer to measure specific gravity. .

> IMPORTANT: All alcohols should be pre-mixed and pumped from a reservoir outside of the building or introduced under water level to prevent alcohols from fuming.

FREEZE PROTECTION SELECTION — The –1.1 C FP1 factory setting (water) should be used to avoid freeze damage to the unit.

Once antifreeze is selected, the JW3 jumper (FP1) should be clipped on the control to select the low temperature (antifreeze –12.2 C) set point to avoid nuisance faults.

Table 18 — Approximate Fluid Volume (L) per 30 M of Pipe

PIPE	DIAMETER (in.) [mm]	VOLUME (gal.) [L]
Copper	1 [25.4]	4.1 [15.5]
	1.25 [31.8]	6.4 [24.2]
	1.5 [38.1]	9.2 [34.8]
Rubber Hose	1 [25.4]	3.9 [14.8]
Polyethylene	3/4 IPS SDR11	2.8 [10.6]
	1 IPS SDR11	4.5 [17.0]
	1 1/4 IPS SDR11	8.0 [30.8]
	1/2 IPS SDR11	10.9 [41.3]
	2 IPS SDR11	18.0 [68.1]
	1 1/4 IPS SCH40	8.3 [31.4]
	1 1/2 IPS SCH40	10.9 [41.3]
	2 IPS SCH40	17.0 [64.4]

LEGEND

IPS — Internal Pipe Size
SCH — Schedule
SDR — Standard Dimensional Ratio

NOTE: Volume of heat exchanger is approximately 3.78 liters.

Table 19 — Antifreeze Percentages by Volume

ANTIFREEZE	MINIMUM TEMPERATURE FOR FREEZE PROTECTION (C)			
	–12.2	–9.4	–6.7	–3.9
Methanol (%)	25	21	16	10
100% USP Food Grade Propylene Glycol (%)	38	30	22	15
Ethanol (%)	29	25	20	14

Cooling Tower/Boiler Systems — These systems typically use a common loop maintained at 15.6 C to 32.2 C. The use of a closed circuit evaporative cooling tower with a secondary heat exchanger between the tower and the water loop is recommended. If an open type cooling tower is used continuously, chemical treatment and filtering will be necessary.

Ground Coupled, Closed Loop and Plateframe Heat Exchanger Well Systems — These systems allow water temperatures from –1.1 to 43.3 C. The external loop field is divided up into 51 mm polyethylene supply and return lines. Each line has valves connected in such a way that upon system start-up, each line can be isolated for flushing using only the system pumps. Air separation should be located in the piping system prior to the fluid re-entering the loop field.

OPERATION

Power Up Mode — The unit will not operate until all the inputs, terminals and safety controls are checked for normal operation.

NOTE: The compressor will have a 5-minute anti-short cycle upon power up.

Units with Aquazone™ Complete C Control

STANDBY — Y and W terminals are not active in Standby mode, however the O and G terminals may be active, depending on the application. The compressor will be off.

COOLING — Y and O terminals are active in Cooling mode. After power up, the first call to the compressor will initiate a 5 to 80 second random start delay and a 5-minute anti-short cycle protection time delay. After both delays are complete, the compressor is energized.

NOTE: On all subsequent compressor calls the random start delay is omitted.

HEATING STAGE 1 — Terminal Y is active in heating stage 1. After power up, the first call to the compressor will initiate a 5 to 80 second random start delay and a 5-minute anti-short cycle protection time delay. After both delays are complete, the compressor is energized.

NOTE: On all subsequent compressor calls the random start delay is omitted.

HEATING STAGE 2 — To enter Stage 2 mode, terminal W is active (Y is already active). Also, the G terminal must be active or the W terminal is disregarded. The compressor relay will remain on and EH1 is immediately turned on. EH2 will turn on after 10 minutes of continual stage 2 demand.

NOTE: EH2 will not turn on (or if on, will turn off) if FP1 temperature is greater than 7.2 C and FP2 is greater than 48.9 C.

EMERGENCY HEAT — In emergency heat mode, terminal W is active while terminal Y is not. Terminal G must be active or the W terminal is disregarded. EH1 is immediately turned on. EH2 will turn on after 5 minutes of continual emergency heat demand.

Units with Aquazone Deluxe D Control

STANDBY/FAN ONLY — The compressor will be off. The Fan Enable, Fan Speed, and reversing valve (RV) relays will be on if inputs are present. If there is a Fan 1 demand, the Fan Enable will immediately turn on. If there is a Fan 2 demand, the Fan Enable and Fan Speed will immediately turn on.

NOTE: DIP switch 5 on S1 does not have an effect upon Fan 1 and Fan 2 outputs.

HEATING STAGE 1 — In Heating Stage 1 mode, the Fan Enable and Compressor relays are turned on immediately. Once the demand is removed, the relays are turned off and the control reverts to Standby mode. If there is a master/slave or dual compressor application, all compressor relays and related functions will operate per their associated DIP switch 2 setting on S1.

HEATING STAGE 2 — In Heating Stage 2 mode, the Fan Enable and Compressor relays are remain on. The Fan Speed relay is turned on immediately and turned off immediately once the demand is removed. The control reverts to Heating Stage 1 mode. If there is a master/slave or dual compressor application, all compressor relays and related functions will operate per their associated DIP switch 2 setting on S1.

HEATING STAGE 3 — In Heating Stage 3 mode, the Fan Enable, Fan Speed and Compressor relays remain on. The EH1 output is turned on immediately. With continuing Heat Stage 3 demand, EH2 will turn on after 10 minutes. EH1 and EH2 are turned off immediately when the Heating Stage 3 demand is removed. The control reverts to Heating Stage 2 mode.

Output EH2 will be off if FP1 is greater than 7.2 C and FP2 (when shorted) is greater than 48.9 C during Heating Stage 3 mode. This condition will have a 30-second recognition time. Also, during Heating Stage 3 mode, EH1, EH2, Fan Enable, and Fan Speed will be ON if G input is not active.

EMERGENCY HEAT — In Emergency Heat mode, the Fan Enable and Fan Speed relays are turned on. The EH1 output is turned on immediately. With continuing Emergency Heat demand, EH2 will turn on after 5 minutes. Fan Enable and Fan Speed relays are turned off after a 60-second delay. The control reverts to Standby mode.

Output EH1, EH2, Fan Enable, and Fan Speed will be ON if the G input is not active during Emergency Heat mode.

COOLING STAGE 1 — In Cooling Stage 1 mode, the Fan Enable, compressor and RV relays are turned on immediately. If configured as stage 2 (DIP switch set to OFF) then the compressor and fan will not turn on until there is a stage 2 demand. The Fan Enable and compressor relays are turned off immediately when the Cooling Stage 1 demand is removed. The control reverts to Standby mode. The RV relay remains on until there is a heating demand. If there is a master/slave or dual compressor application, all compressor relays and related functions will track with their associated DIP switch 2 on S1.

COOLING STAGE 2 — In Cooling Stage 2 mode, the Fan Enable, compressor and RV relays remain on. The Fan Speed relay is turned on immediately and turned off once the Cooling Stage 2 demand is removed. The control reverts to Cooling Stage 1 mode. If there is a master/slave or dual compressor application, all compressor relays and related functions will track with their associated DIP switch 2 on S1.

NIGHT LOW LIMIT (NLL) STAGED HEATING — In NLL staged Heating mode, the override (OVR) input becomes active and is recognized as a call for heating and the control will immediately go into a Heating Stage 1 mode. With an additional 30 minutes of NLL demand, the control will go into Heating Stage 2 mode. With another additional 30 minutes of NLL demand, the control will go into Heating Stage 3 mode.

COMPLETE C AND DELUXE D BOARD SYSTEM TEST

System testing provides the ability to check the control operation. The control enters a 20-minute Test mode by momentarily shorting the test pins. All time delays are increased 15 times.

Test Mode — To enter Test mode on Complete C or Deluxe D controls, cycle the power 3 times within 60 seconds. The LED (light-emitting diode) will flash a code representing the last fault when entering the Test mode. The alarm relay will also power on and off during Test mode. See Tables 20-22. To exit Test mode, short the terminals for 3 seconds or cycle the power 3 times within 60 seconds.

NOTE: The Deluxe D control has a flashing code and alarm relay cycling code that will both have the same numerical label. For example, flashing code 1 will have an alarm relay cycling code 1. Code 1 indicates the control has not faulted since the last power off to power on sequence.

Table 20 — Complete C Control Current LED Status and Alarm Relay Operations

LED STATUS	DESCRIPTION OF OPERATION	ALARM RELAY
On	Normal Mode	Open
	Normal Mode with PM Warning	Cycle (closed 5 sec., Open 25 sec.)
Off	Complete C Control is non-functional	Open
Slow Flash	Fault Retry	Open
	Over/Under Voltage Shutdown	Open (Closed after 15 minutes)
Fast Flash	Lockout	Closed
Flashing Code 1	Test Mode — No fault in memory	Cycling Code 1
Flashing Code 2	Test Mode — HP Fault in memory	Cycling Code 2
Flashing Code 3	Test Mode — LP Fault in memory	Cycling Code 3
Flashing Code 4	Test Mode — FP1 Fault in memory	Cycling Code 4
Flashing Code 5	Test Mode — FP2 Fault in memory	Cycling Code 5
Flashing Code 6	Test Mode — CO Fault in memory	Cycling Code 6
Flashing Code 7	Test Mode — Over/Under shutdown in memory	Cycling Code 7
Flashing Code 8	Test Mode — PM in memory	Cycling Code 8
Flashing Code 9	Test Mode — FP1/FP2 Swapped fault in memory	Cycling Code 9

LEGEND

CO — Condensate Overflow
FP — Freeze Protection
HP — High Pressure
LED — Light-Emitting Diode
LP — Low Pressure
PM — Performance Monitor

NOTES:
1. Slow flash is 1 flash every 2 seconds.
2. Fast flash is 2 flashes every 1 second.
3. EXAMPLE: “Flashing Code 2” is represented by 2 fast flashes followed by a 10-second pause. This sequence will repeat continually until the fault is cleared.

Table 21 — Complete C Control LED Code and Fault Descriptions

LED CODE	FAULT	DESCRIPTION
1	No fault in memory	There has been no fault since the last power-down to power-up sequence
2	High-Pressure Switch	HP Open Instantly
3	Low-Pressure Switch	LP open for 30 continuous seconds before or during a call (bypassed for first 60 seconds)
4	Freeze Protection Coax — FP1	FP1 below Temp limit for 30 continuous seconds (bypassed for first 60 seconds of operation)
5	Freeze Protection Air Coil — FP2	FP2 below Temp limit for 30 continuous seconds (bypassed for first 60 seconds of operation)
6	Condensate overflow	Sense overflow (grounded) for 30 continuous seconds
7 (Autoreset)	Over/Under Voltage Shutdown	"R" power supply is <19VAC or >30VAC
8	PM Warning	Performance Monitor Warning has occurred.
9	FP1 and FP2 Thermistors are swapped	FP1 temperature is higher than FP2 in heating/test mode, or FP2 temperature is higher than FP1 in cooling/test mode.

LEGEND

FP — Freeze Protection
HP — High Pressure
LED — Light-Emitting Diode
PM — Performance Monitor

Table 22 — Aquazone™ Deluxe D Control Current LED Status and Alarm Relay Operations

DESCRIPTION	STATUS LED (Green)	TEST LED (Yellow)	FAULT LED (Red)	ALARM RELAY
Normal Mode	On	Off	Flash Last Fault Code in Memory	Open
Normal Mode with PM	On	Off	Flashing Code 8	Cycle (closed 5 sec, open 25 sec, …)
Deluxe D Control is non-functional	Off	Off	Off	Open
Test Mode	—	On	Flash Last Fault Code in Memory	Cycling Appropriate Code
Night Setback	Flashing Code 2	—	Flash Last Fault Code in Memory	—
ESD	Flashing Code 3	—	Flash Last Fault Code in Memory	—
Invalid T-stat Inputs	Flashing Code 4	—	Flash Last Fault Code in Memory	—
No Fault in Memory	On	Off	Flashing Code 1	Open
HP Fault	Slow Flash	Off	Flashing Code 2	Open
LP Fault	Slow Flash	Off	Flashing Code 3	Open
FP1 Fault	Slow Flash	Off	Flashing Code 4	Open
FP2 Fault	Slow Flash	Off	Flashing Code 5	Open
CO Fault	Slow Flash	Off	Flashing Code 6	Open
Over/Under Voltage	Slow Flash	Off	Flashing Code 7	Open (closed after 15 minutes)
HP Lockout	Fast Flash	Off	Flashing Code 2	Closed
LP Lockout	Fast Flash	Off	Flashing Code 3	Closed
FP1 Lockout	Fast Flash	Off	Flashing Code 4	Closed
FP2 Lockout	Fast Flash	Off	Flashing Code 5	Closed
CO Lockout	Fast Flash	Off	Flashing Code 6	Closed

LEGEND

CO — Condensate Overflow
ESD — Emergency Shutdown
FP — Freeze Protection
HP — High Pressure
LP — Low Pressure
PM — Performance Monitor

NOTES:
1. If there is no fault in memory, the Fault LED will flash code 1.
2. Codes will be displayed with a 10-second Fault LED pause.
3. Slow flash is 1 flash every 2 seconds.
4. Fast flash is 2 flashes every 1 second.
5. EXAMPLE: “Flashing Code 2” is represented by 2 fast flashes followed by a 10-second pause. This sequence will repeat continually until the fault is cleared.

Retry Mode — In Retry mode, the status LED will start to flash slowly to signal that the control is trying to recover from an input fault. The control will stage off the outputs and try to again satisfy the thermostat used to terminal Y. Once the thermostat input calls are satisfied, the control will continue normal operation.

NOTE: If 3 consecutive faults occur without satisfying the thermostat input call to terminal Y, the control will go into lockout mode. The last fault causing the lockout is stored in memory and can be viewed by entering Test mode.

Aquazone™ Deluxe D Control LED Indicators — There are 3 LED indicators on the Deluxe D control:

STATUS LED — Status LED indicates the current status or mode of the Deluxe D control. The Status LED light is green.

TEST LED — Test LED will be activated any time the Deluxe D control is in Test mode. The Test LED light is yellow.

FAULT LED — Fault LED light is red. The fault LED will always flash a code representing the last fault in memory. If there is no fault in memory, the fault LED will flash code 1 and appear as 1 fast flash alternating with a 10-second pause. See Table 22.

SERVICE

Perform the procedures outlined below periodically, as indicated.

IMPORTANT: When a compressor is removed from this unit, system refrigerant circuit oil will remain in the compressor. To avoid leakage of compressor oil, the refrigerant lines of the compressor must be sealed after it is removed.

IMPORTANT: All refrigerant discharged from this unit must be recovered without exception. Technicians must follow industry accepted guidelines and all local, state and federal statutes for the recovery and disposal of refrigerants.

IMPORTANT: To avoid the release of refrigerant into the atmosphere, the refrigerant circuit of this unit must only be serviced by technicians which meet local, state and federal proficiency requirements.

IMPORTANT: To prevent injury or death due to electrical shock or contact with moving parts, open unit disconnect switch before servicing unit.

Filters — Filters must be clean for maximum performance. Inspect filters every month under normal operating conditions. replace when necessary.

IMPORTANT: Units should never be operated without a filter.

Water Coil — Keep all air out of the water coil. Check open loop systems to be sure the well head is not allowing air to infiltrate the water line. Always keep lines airtight.

Inspect heat exchangers regularly, and clean more frequently if the unit is located in a "dirty" environment. The heat exchanger should be kept full of water at all times. Open loop systems should have an inverted P trap placed in the discharge line to keep water in the heat exchanger during off cycles. Closed loop systems must have a minimum of 100 kPa during the summer and 275 kPa during the winter.

Check P trap frequently for proper operation.

IMPORTANT: To avoid fouled machinery and extensive unit clean-up, DO NOT operate units without filters in place. DO NOT use equipment as a temporary heat source during construction.

Condensate Drain Pans — Check condensate drain pans for algae growth twice a year. If algae growth is apparent, consult a water treatment specialist for proper chemical treatment. The application of an algaecide every three months will typically eliminate algae problems in most locations.

Refrigerant System — Verify air and water flow rates are at proper levels before servicing. To maintain sealed circuitry integrity, do not install service gages unless unit operation appears abnormal.

Condensate Drain Cleaning — Clean the drain line and unit drain pan at the start of each cooling season. Check flow by pouring water into drain. Be sure trap is filled to maintain an air seal.

Air Coil Cleaning — Remove dirt and debris from evaporator coil as required by condition of the coil. Clean coil with a stiff brush, vacuum cleaner, or compressed air. Use a fin comb of the correct tooth spacing when straightening mashed or bent coil fins.

Condenser Cleaning — Water-cooled condensers may require cleaning of scale (water deposits) due to improperly maintained closed-loop water systems. Sludge build-up may need to be cleaned in an open water tower system due to induced contaminants.

Local water conditions may cause excessive fouling or pitting of tubes. Condenser tubes should therefore be cleaned at least once a year, or more often if the water is contaminated.

Proper water treatment can minimize tube fouling and pitting. If such conditions are anticipated, water treatment analysis is recommended. Refer to the Carrier System Design Manual, Part 5, for general water conditioning information.

⚠ CAUTION

Follow all safety codes. Wear safety glasses and rubber gloves when using inhibited hydrochloric acid solution. Observe and follow acid manufacturer's instructions. Failure to follow these safety precautions could result in personal injury or equipment or property damage.

Clean condensers with an inhibited hydrochloric acid solution. The acid can stain hands and clothing, damage concrete, and, without inhibitor, damage steel. Cover surroundings to guard against splashing. Vapors from vent pipe are not harmful, but take care to prevent liquid from being carried over by the gases.

Warm solution acts faster, but cold solution is just as effective if applied for a longer period.

GRAVITY FLOW METHOD — Do not add solution faster than vent can exhaust the generated gases.

When condenser is full, allow solution to remain overnight, then drain condenser and flush with clean water. Follow acid manufacturer's instructions. See Fig. 36.

FORCED CIRCULATION METHOD — Fully open vent pipe when filling condenser. The vent may be closed when condenser is full and pump is operating. See Fig. 37.

Regulate flow to condenser with a supply line valve. If pump is a nonoverloading type, the valve may be fully closed while pump is running.

For average scale deposit, allow solution to remain in condenser overnight. For heavy scale deposit, allow 24 hours.

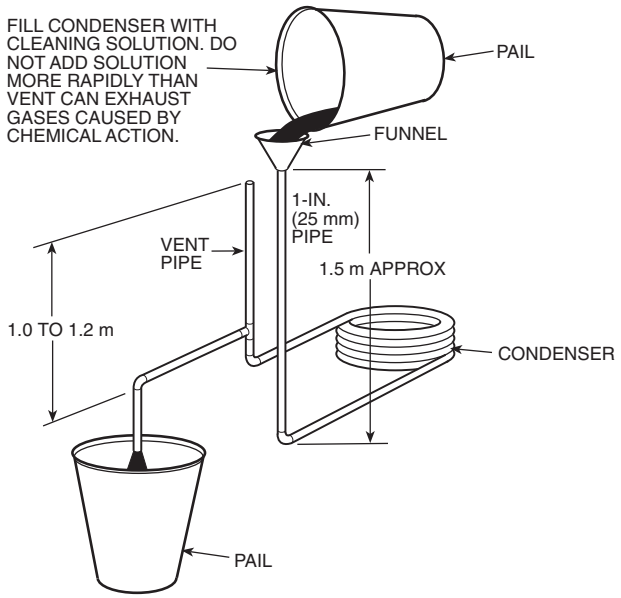

Fig. 36 — Gravity Flow Method

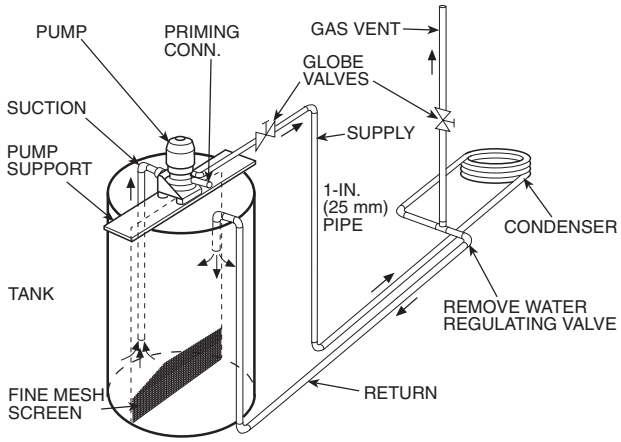

Fig. 37 — Forced Circulation Method

Drain condenser and flush with clean water. Follow acid manufacturer's instructions.

Checking System Charge — Units are shipped with full operating charge. If recharging is necessary:

1. Insert thermometer bulb in insulating rubber sleeve on liquid line near filter drier. Use a digital thermometer for all temperature measurements. DO NOT use a mercury or dial-type thermometer.
2. Connect pressure gage to discharge line near compressor.
3. After unit conditions have stabilized, read head pressure on discharge line gage.

   NOTE: Operate unit a minimum of 15 minutes before checking charge.
4. From standard field-supplied Pressure-Temperature chart for R-410A, find equivalent saturated condensing temperature.
5. Read liquid line temperature on thermometer; then subtract from saturated condensing temperature. The difference equals subcooling temperature.

Refrigerant Charging

⚠ WARNING

To prevent personal injury, wear safety glasses and gloves when handling refrigerant. Do not overcharge system — this can cause compressor flooding.

NOTE: Do not vent or depressurize unit refrigerant to atmosphere. Remove and recover refrigerant following accepted practices.

Air Coil Fan Motor Removal

⚠ CAUTION

Before attempting to remove fan motors or motor mounts, place a piece of plywood over evaporator coils to prevent coil damage.

Motor power wires need to be disconnected from motor terminals before motor is removed from unit.

1. Shut off unit main power supply.
2. Loosen bolts on mounting bracket so that fan belt can be removed.
3. Loosen and remove the 2 motor mounting bracket bolts on left side of bracket.
4. Slide motor/bracket assembly to extreme right and lift out through space between fan scroll and side frame. Rest motor on a high platform such as a step ladder. Do not allow motor to hang by its power wires.

TROUBLESHOOTING

When troubleshooting problems with a WSHP, see Table 23.

Thermistor — A thermistor may be required for single-phase units where starting the unit is a problem due to low voltage. See Fig. 38 for thermistor nominal resistance.

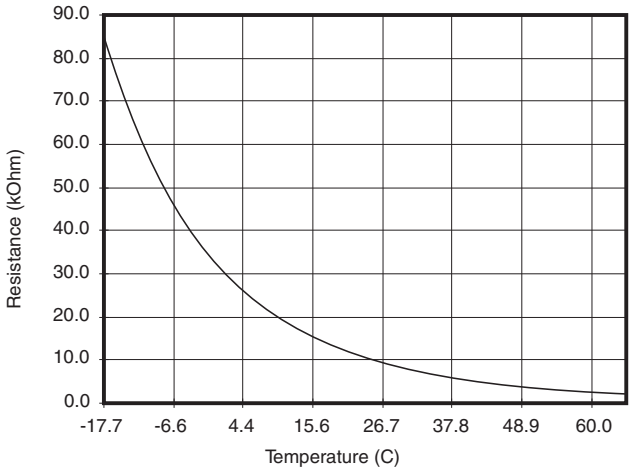

Fig. 38 — Thermistor Nominal Resistance

Control Sensors — The control system employs 2 nominal 10,000 ohm thermistors (FP1 and FP2) that are used for freeze protection. Be sure FP1 is located in the discharge fluid and FP2 is located in the air discharge. See Fig. 39.

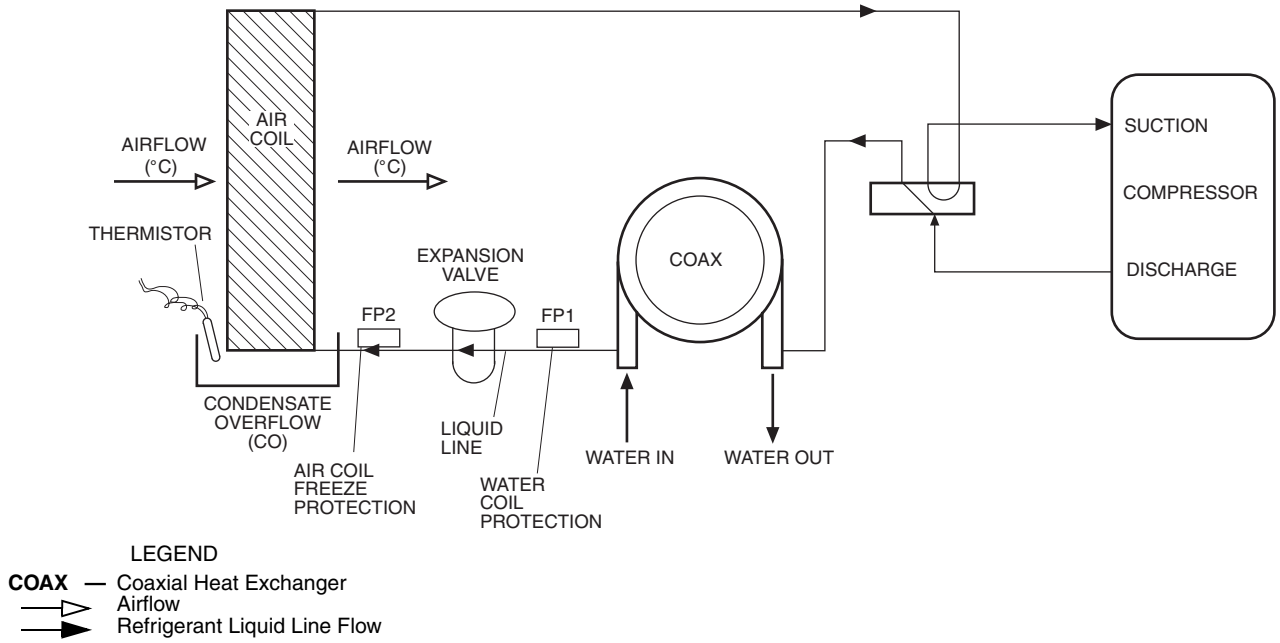

Fig. 39 — FP1 and FP2 Thermistor Location

Table 23 — Troubleshooting

FAULT	HEATING	COOLING	POSSIBLE CAUSE	SOLUTION
Main Power Problems	X	X	Green Status LED Off	Check line voltage circuit breaker and disconnect.
				Check for line voltage between L1 and L2 on the contactor.
				Check for 24-vac between R and C on controller.
				Check primary/secondary voltage on transformer.
HP Fault — Code 2 High Pressure		X	Reduced or no water flow in cooling	Check pump operation or valve operation/setting.
				Check water flow adjust to proper flow rate.
		X	Water temperature out of range in cooling	Bring water temperature within design parameters.
	X		Reduced or no airflow in heating	Check for dirty air filter and clean or replace.
				Check fan motor operation and airflow restrictions.
				Dirty air coil — construction dust, etc. Perform preventative maintenance; Clean air coil.
				High external static. Check duct design and downstream interference.
	X		Air temperature out of range in heating	Bring return-air temperature within design parameters.
	X	X	Overcharged with refrigerant	Check superheat/subcooling vs. typical operating condition.
	X	X	Bad HP switch	Check switch continuity and operation. Replace.
LP Fault — Code 3 Low Pressure/Loss of Charge	X	X	Insufficient charge	Check for refrigerant leaks.
	X		Compressor pump down at start-up	Check charge and start-up water flow.
FP1 Fault — Code 4 Water Freeze Protection	X		Reduced or no water flow in heating	Check pump operation or water valve operation/setting.
				Plugged strainer or filter. Clean or replace.
				Check water flow adjust to proper flow rate.
	X		Inadequate antifreeze level	Check antifreeze density with hydrometer.
	X		Improper freeze protect setting (–1.1 C vs –12.2 C)	Clip JW3 jumper for antifreeze (–12.2 C) use.
	X		Water temperature out of range	Bring water temperature within design parameters.
	X	X	Bad thermistor	Check temperature and impedance correlation.
FP2 Fault — Code 5 Air Coil Freeze Protection		X	Reduced or no airflow in cooling	Check for dirty air filter and clean or replace.
				Check fan motor operation and airflow restrictions.
				High external static. Check duct design and downstream interference.
		X	Air temperature out of range	Too much cold vent air. Bring entering-air temperature within design parameters.
		X	Improper freeze protect setting (–1.1 C vs –12.2 C)	Normal airside applications will require –1.1 C only.
	X	X	Bad thermistor	Check temperature and impedance correlation.
Condensate Fault — Code 6	X	X	Blocked drain	Check for blockage and clean drain.
	X	X	Improper trap	Check trap dimensions and location ahead of vent.
		X	Poor drainage	Check for piping slope away from unit.
				Check slope of unit toward outlet.
				Poor venting. Check vent location.
		X	Moisture on sensor	Check for moisture shorting to air coil.
Over/Under Voltage — Code 7 (Auto Resetting)	X	X	Under voltage	Check power supply and 24-vac voltage before and during operation.
				Check power supply wire size.
				Check compressor starting.
				Check 24-vac and unit transformer tap for correct power supply voltage.
	X	X	Over voltage	Check power supply voltage and 24 vac before and during operation.
				Check 24-vac and unit transformer tap for correct power supply voltage.
Performance Monitor — Code 8	X		Heating mode FP2> 51.7 C	Check for poor airflow or overcharged unit.
		X	Cooling mode FP1> 51.7 C OR FP2< 4.4 C	Check for poor water flow or airflow.
No Fault Code Shown	X	X	Compressor overload	Check and replace if necessary.
	X	X	Control board	Reset power and check operation.
Unit Short Cycles	X	X	Dirty air filter	Check and clean air filter.
	X	X	Unit in Test mode	Reset power or wait 20 minutes for auto exit.
	X	X	Unit selection	Unit may be oversized for space. Check sizing for actual load of space.
	X	X	Compressor overload	Check and replace if necessary.
Only Fan Runs	X	X	Thermostat position	Ensure thermostat set for heating or cooling operation.
	X	X	Unit locked out	Check for lockout codes. Reset power.
	X	X	Compressor overload	Check compressor overload. Replace if necessary.
	X	X	Thermostat wiring	Check Y and W wiring at heat pump. Jumper Y and R for compressor operation in Test mode.

LEGEND

FP — Freeze Protection
HP — High Pressure
LED — Light-Emitting Diode
LP — Low Pressure
RV — Reversing Valve

Table 23 — Troubleshooting (cont)

FAULT	HEATING	COOLING	POSSIBLE CAUSE	SOLUTION
Only Compressor Runs	X	X	Thermostat wiring	Check G wiring at heat pump. Jumper G and R for fan operation.
				Check Y and W wiring at heat pump. Jumper Y and R for compressor operation in Test mode.
	X	X	Fan motor relay	Jumper G and R for fan operation. Check for line voltage across BR contacts.
				Check fan power enable relay operation (if present).
	X	X	Fan motor	Check for line voltage at motor. Check capacitor.
Unit Does Not Operate in Cooling		X	Reversing valve	Set for cooling demand and check 24-vac on RV coil and at control.
				If RV is stuck, run high pressure up by reducing water flow and while operating engage and disengage RV coil voltage to push valve.
		X	Thermostat setup	Check for 'O' RV setup not 'B'.
		X	Thermostat wiring	Check O wiring at heat pump. Jumper O and R for RV coil.
Insufficient Capacity/ Not Cooling or Heating Properly	X	X	Dirty filter	Replace or clean.
	X		Reduced or no airflow in heating	Check for dirty air filter and clean or replace.
				Check fan motor operation and airflow restrictions.
				High external static. Check duct design and downstream interference.
		X	Reduced or no airflow in cooling	Check for dirty air filter and clean or replace.
				Check fan motor operation and airflow restrictions.
				High external static. Check duct design and downstream interference.
	X	X	Leaky ductwork	Check supply and return-air temperatures at the unit and at distant duct registers if significantly different, duct leaks are present.
	X	X	Low refrigerant charge	Check superheat and subcooling.
	X	X	Restricted metering device	Check superheat and subcooling. Replace.
		X	Defective reversing valve	Perform RV touch test.
	X	X	Thermostat improperly located	Check location and for air drafts behind thermostat.
	X	X	Unit undersized	Recheck loads and sizing check sensible cooling load and heat pump capacity.
	X	X	Scaling in water heat exchanger	Perform scaling check and clean if necessary.
	X	X	Inlet water too hot or cold	Check load, loop sizing, loop backfill, ground moisture.
High Head Pressure	X		Reduced or no airflow in heating	Check for dirty air filter and clean or replace.
				Check fan motor operation and airflow restrictions.
				High external static. Check duct design and downstream interference.
		X	Reduced or no water flow in cooling	Check pump operation or valve operation/setting.
				Check water flow adjust to proper flow rate.
		X	Inlet water too hot	Check load, loop sizing, loop backfill, ground moisture.
	X		Air temperature out of range in heating	Bring return-air temperature within design parameters.
		X	Scaling in water heat exchanger	Perform scaling check and clean if necessary.
	X	X	Unit overcharged	Check superheat and subcooling. Reweigh in charge.
	X	X	Non-condensables in system	Vacuum system and reweigh in charge.
	X	X	Restricted metering device	Check superheat and subcooling. Replace.
Low Suction Pressure	X		Reduced water flow in heating	Check pump operation or water valve operation/setting.
				Plugged strainer or filter. Clean or replace.
				Check water flow adjust to proper flow rate.
	X		Water temperature out of range	Bring water temperature within design parameters.
		X	Reduced airflow in cooling	Check for dirty air filter and clean or replace.
				Check fan motor operation and airflow restrictions.
				High external static. Check duct design and downstream interference.
		X	Air temperature out of range	Too much cold vent air. Bring entering air temperature within design parameters.
	X	X	Insufficient charge	Check for refrigerant leaks.
Low Discharge Air Temperature in Heating	X		Too high airflow	Check blower.
	X		Poor performance	See 'Insufficient Capacity' above.
High Humidity		X	Too high airflow	Check blower.
		X	Unit oversized	Recheck loads and sizing check sensible cooling load and heat pump capacity.

LEGEND

FP — Freeze Protection
HP — High Pressure
LED — Light-Emitting Diode
LP — Low Pressure
RV — Reversing Valve

50VQP
START-UP CHECKLIST

CUSTOMER:_____ JOB NAME: _____

MODEL NO.:_____ SERIAL NO.:_____ DATE:_____

I. PRE-START-UP

DOES THE UNIT VOLTAGE CORRESPOND WITH THE SUPPLY VOLTAGE AVAILABLE? (Y/N) _____

HAVE THE POWER AND CONTROL WIRING CONNECTIONS BEEN MADE AND TERMINALS TIGHT? (Y/N) _____

HAVE WATER CONNECTIONS BEEN MADE AND IS FLUID AVAILABLE AT HEAT EXCHANGER? (Y/N) _____

HAS PUMP BEEN TURNED ON AND ARE ISOLATION VALVES OPEN? (Y/N) _____

HAS CONDENSATE CONNECTION BEEN MADE AND IS A TRAP INSTALLED? (Y/N) _____

IS AN AIR FILTER INSTALLED? (Y/N) _____

II. START-UP

IS FAN OPERATING WHEN COMPRESSOR OPERATES? (Y/N) _____

IF 3-PHASE SCROLL COMPRESSOR IS PRESENT, VERIFY PROPER ROTATION PER INSTRUCTIONS. (Y/N) _____

UNIT VOLTAGE — COOLING OPERATION

PHASE AB VOLTS _____ PHASE BC VOLTS_____ (if 3 phase) PHASE CA VOLTS_____ (if 3 phase)

PHASE AB AMPS _____ PHASE BC AMPS_____ (if 3 phase) PHASE CA AMPS _____ (if 3 phase)

CONTROL VOLTAGE

IS CONTROL VOLTAGE ABOVE 21.6 VOLTS? (Y/N) _____.
IF NOT, CHECK FOR PROPER TRANSFORMER CONNECTION.

TEMPERATURES

FILL IN THE ANALYSIS CHART ATTACHED.

COAXIAL HEAT EXCHANGER	COOLING CYCLE: FLUID IN	_____	C	FLUID OUT	_____	C	_____	kPa	_____ L/s
	HEATING CYCLE: FLUID IN	_____	C	FLUID OUT	_____	C	_____	kPa	_____ L/s
AIR COIL	COOLING CYCLE: AIR IN	_____	C	AIR OUT	_____	C			
	HEATING CYCLE: AIR IN	_____	C	AIR OUT	_____	C			

HEATING CYCLE ANALYSIS

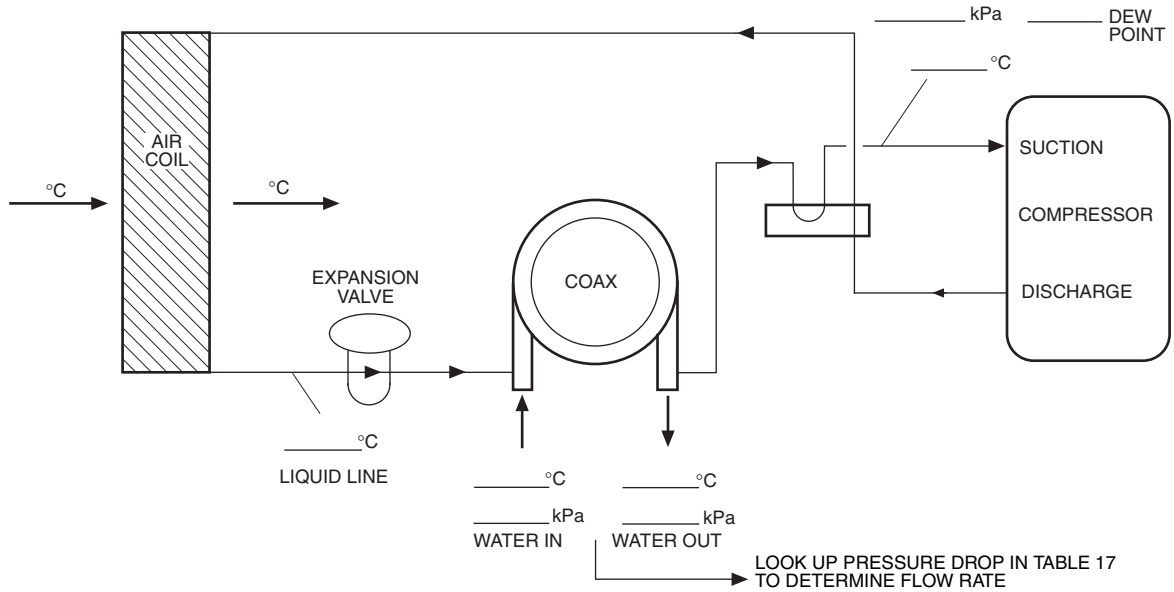

COOLING CYCLE ANALYSIS

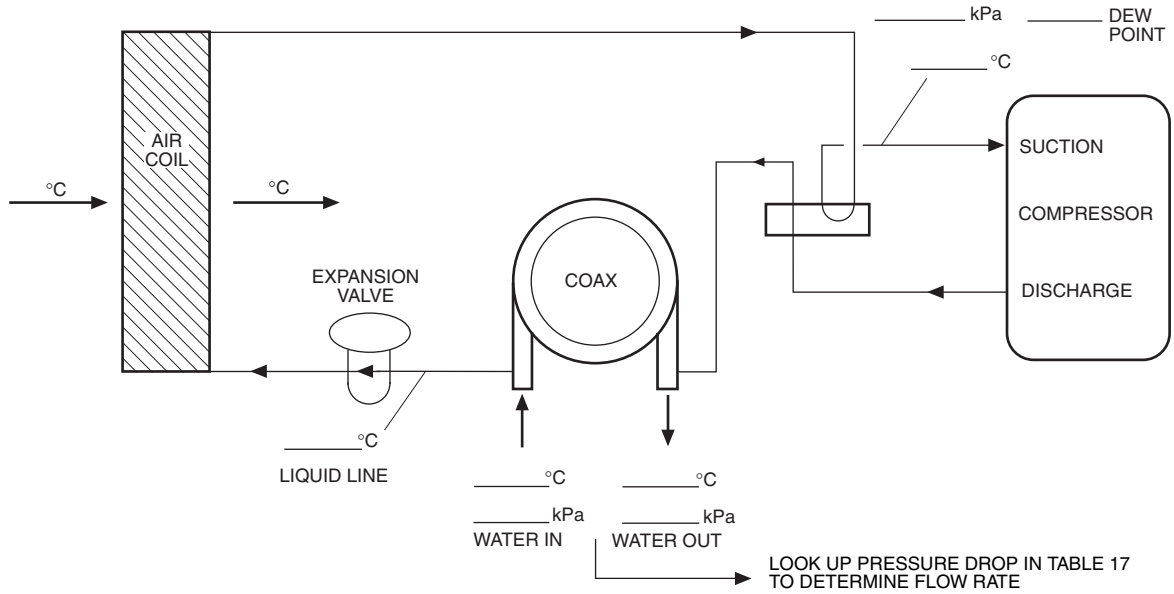

HEAT OF EXTRACTION (ABSORPTION) OR HEAT OF REJECTION =

_____ FLOW RATE (L/s) x _____ TEMP. DIFF. (DEG. C) x _____ FLUID FACTOR* = _____ (kW)

SUPERHEAT = SUCTION TEMPERATURE – SUCTION SATURATION TEMPERATURE
= ____ (DEG C)

SUBCOOLING = DISCHARGE SATURATION TEMPERATURE – LIQUID LINE TEMPERATURE
= ____ (DEG C)

*Use 500 for water, 485 for antifreeze.

CUT ALONG DOTTED LINE

CUT ALONG DOTTED LINE