Air-Cooled Condensing Units

PRO-DIALOG

ISO9001 · ISO14001

Quality and Environment Management Systems Approval

38RBS 039-160

Nominal cooling capacity: 40-160 kW

The new generation of condensing units was designed for commercial (air conditioning of offices, hotels etc.).

The units integrate the latest technological innovations:
- ozone-friendly refrigerant R410A
- scroll compressors
- low-noise fans made of a composite material
- auto-adaptive microprocessor control

Features

- Compressors
  - Low-noise scroll compressors with low vibration level
  - The compressor assembly is installed on an independent chassis and supported by anti-vibration mountings
  - Dynamic suction and discharge piping support, minimising vibration transmission (Carrier patent)
- Condenser section
  - Vertical condenser coils
  - Protection grilles on anti-vibration mountings to protect the heat exchanger against possible shocks.
  - Low-noise latest-generation Flying Bird IV fans, made of a composite material (Carrier patent) are now even quieter and do not generate intrusive low-frequency noise
  - Fan motor controlled by a variable-frequency controller, to allow reduction of the fan speed, if the extra low noise option 15LS is selected.
  - Rigid fan installation for reduced start-up noise (Carrier patent)
- The refrigerant circuit includes all components for easy connection to a direct-expansion air handling unit: filter drier, moisture sight glass, high and low pressure switch, as well as solenoid valves for pumpdown (to be installed on the evaporator). All pipes and the refrigeration components are welded. From size 38RBS 140 onwards, two independent refrigerant circuits ensure partial cooling capacity in all circumstances, and more flexible operation at part load.
- Year-round operation
  The 38RBS units are designed for year-round operation, and operate without the use of accessories down to -10°C. A control algorithm intelligently manages operation of the fans. Option 28 allows stable unit operation at air temperatures below -10°C and down to -20°C.

Easy and fast installation

- Physical features
  - Small unit footprint with a low height (1371 mm) for easy installation in any application.
  - The unit is enclosed by easily removable panels, covering all components (except air heat exchanger and fans).
- Simplified electrical connections
  - A single power supply point without neutral
  - Main disconnect switch with high trip capacity
- The control circuit of the 38RBS units is equipped with a standard low-voltage transformer (24 V). This transformer can also supply the other electrical components of the air conditioning system: room thermostat and pumpdown solenoid valves.

- Fast commissioning
  - Systematic factory operation test before shipment
  - Quick-test function for step-by-step verification of the instruments, electrical components and motors

Economical operation

- Increased energy efficiency at part load
  The refrigerant circuit includes several compressors connected in parallel. At part load, around 99% of the operating time, only the compressors that are absolutely necessary operate. At these conditions the compressors operating are more energy efficient, as they use the total condenser and evaporator capacity.
- Reduced maintenance costs
  - Maintenance-free scroll compressors
  - Fast diagnosis of possible incidents and their history via the Pro-Dialog+ control
  - R410A refrigerant is easier to use than other refrigerant blends

Environmental care

- Ozone-friendly R410A refrigerant
  - Chlorine-free refrigerant of the HFC group with zero ozone depletion potential
  - High-density refrigerant, therefore less refrigerant required
  - Very efficient - gives an increased energy efficiency ratio (EER, COP and ESEER)
- Leak-tight refrigerant circuit
  - Brazed refrigerant connections for increased leak-tightness (factory nitrogen charge)
  - Verification of pressure transducers and temperature sensors without transferring refrigerant charge

Superior reliability

- State-of-the-art concept
  - Cooperation with specialist laboratories and use of limit simulation tools (finite element calculations) for the design of the critical components, e.g. motor supports, suction/discharge piping etc.
- Auto-adaptive control
  - Automatic compressor unloading in case of abnormally high condensing pressure. If an anomaly occurs (e.g. fouled air heat exchanger coil, fan failure) the condensing unit continues to operate, but at reduced capacity.
- Exceptional endurance tests
  - Corrosion resistance tests in salt mist in the laboratory
  - Accelerated ageing test on components that are submitted to continuous operation: compressor piping, fan supports
  - Transport simulation test in the laboratory on a vibrating table.

Pro-Dialog+ control

Pro-Dialog+ combines intelligence with operating simplicity. The control constantly monitors all machine parameters and precisely manages the operation of compressors and fans for optimum energy efficiency.

- Energy management
  - Seven-day internal time schedule clock: permits unit on/off control and operation at a second setpoint
  - Setpoint reset by the user via a room sensor (option).
- Integrated features
  - Night mode: capacity and fan speed limitation for reduced noise level
  - Solenoid valve control for evaporator pumpdown (valves supplied as a kit with the unit).

Carrier Comfort Network (CCN) operating mode

A simple two-wire communication bus between the RS485 port and the Carrier Comfort Network offers multiple remote control, monitoring and diagnostic possibilities. Carrier offers a vast choice of control products, specially designed to control, manage and supervise the operation of an air conditioning system. Please consult your Carrier representative for more information on these products.

Remote operating mode with volt-free contacts (standard)

- Start/stop: opening of this contact will shut down the unit
- Alarm indication using an LED: availability of a volt-free contact that indicates the presence of a major fault that has led to the shut-down of one or two refrigerant circuits.
- User safety: this contact can be used for any customer safety loop, opening of the contact generates a specific alarm.

Remote Pro-Dialog+ interface (option)

This interface can be installed up to 300 m away. It includes a box that can be mounted inside the building. The power supply is provided via a 220 V/24 V transformer supplied.

- Ease-of-use
  - Backlit LCD interface (option) includes a manual control potentiometer to ensure legibility under any lighting conditions.
  - The information is displayed clearly in English, French, German, Italian and Spanish (for other languages please consult Carrier)
  - The Pro-Dialog+ navigation uses intuitive tree-structure menus, similar to the Internet navigators. They are user-friendly and permit quick access to the principal operating parameters: number of compressors operating, suction/discharge pressure, compressor operating hours, setpoint, air temperature.

Pro-Dialog+ interface

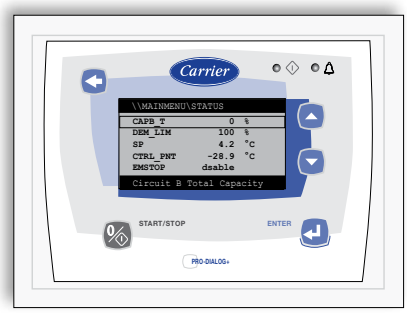

Room temperature and supply air temperature sensors for capacity control (option)

- The room temperature sensor permits temperature adjustment using a potentiometer.
- The supply air temperature sensor must be installed in the air handling unit air flow to control the minimum supply air temperature (adjustable via the remote Pro-Dialog+ interface.

Adustable room temperature sensor (option)

Options

Options	No.	Description	Advantages	Use
Condenser with anti-corrosion post-treatment	2B	Coils with factory-applied Blygold Polual treatment	Improved corrosion resistance, recommended for urban, industrial and rural environments	38RBS 039-160
Condenser with pre-treated fins	3A	Fins made of pre-treated aluminium (polyurethane and epoxy)	Improved corrosion resistance, recommended for marine environments	38RBS 039-160
Very low noise level	15LS	Acoustic compressor enclosure and low-speed fans	Noise emission reduction at reduced fan speed	38RBS 039-160
Soft starter	25	Electronic compressor starter	Reduced compressor start-up current	38RBS 039-080
Winter operation	28	Fan speed control by frequency variator	Stable unit operation, when the air temperature is between -10°C and -20°C	38RBS 039-160
Suction and liquid line valves	92B	Ball valves on the suction and liquid line	Unit isolation from the rest of the refrigerant circuit	38RBS 039-160
JBus gateway	148B	Two-directional communications board, complies with JBus protocol	Easy connection by communication bus to a building management system	38RBS 039-160
Bacnet gateway	148C	Two-directional communications board, complies with Bacnet protocol	Easy connection by communication bus to a building management system	38RBS 039-160
LonTalk gateway	148D	Two-directional communications board, complies with LonTalk protocol	Easy connection by communication bus to a building management system	38RBS 039-160
Remote Pro-Dialog+ user interface	275	Pro-Dialog+ user interface for remote installation	Remote control of the unit and its operating parameters	38RBS 039-160
Replaceable filter drier	277	Filter drier with cartridge to replace hermetic filter	Easy filter replacement without emptying the refrigerant circuit	38RBS 039-160
Temperature sensor kit	278	Room temperature sensor with adjustable set-point and supply air sensor for installation in the air handling unit for capacity control	Optimisation of the unit capacity control, based on the usage conditions	38RBS 039-160

Physical data

38RBS		039	045	050	060	070	080	090	100	120	140	160
Nominal cooling capacity, standard unit*	kW	40.4	45.9	52.4	58.5	66.7	77.9	90.4	100.9	119.4	139.6	161.7
Power input	kW	13.8	16.3	19.0	21.2	24.4	28.8	31.8	36.0	43.6	50.2	58.7
EER	kW/kW	2.92	2.81	2.75	2.76	2.74	2.7	2.84	2.81	2.74	2.78	2.75
Weight ex-factory, standard unit**	kg	399	408	425	445	435	456	698	701	719	796	842
Sound levels												
Standard unit												
Sound power level 10-12 W*****	dB(A)	80	81	81	81	87	87	84	84	84	90	90
Sound pressure level at 10 m******	dB(A)	49	49	49	49	55	55	52	52	52	58	58
Unit with option 15LS (very low sound level)												
Sound power level 10-12 W*****	dB(A)	79	80	80	80	80	80	83	83	83	83	83
Sound pressure level at 10 m******	dB(A)	48	48	48	48	48	48	51	51	51	51	51
Compressors		Hermetic scroll compressor, 48.3 r/s										
Circuit A		2	2	2	2	2	2	3	3	3	2	2
Circuit B		-	-	-	-	-	-	-	-	-	2	2
Number of capacity stages		2	2	2	2	2	2	3	3	3	4	4
Refrigerant		R-410A										
Control		Pro-Dialog+										
Minimum capacity	%	50	50	50	50	50	50	33	33	33	25	25
Capacity split, circuit A/B	%	100/0	100/0	100/0	100/0	100/0	100/0	100/0	100/0	100/0	50/50	50/50
Condensers		Grooved copper tubes, aluminium fins										
Fans		Axial Flying Bird 4 fans with rotating shroud										
Quantity		1	1	1	1	1	1	2	2	2	2	2
Total at flow (high speed)	l/s	3800	3800	3800	3800	5300	5300	7600	7600	7600	10600	10600
Speed	r/s	12	12	12	12	16	16	12	12	12	16	16
Refrigerant connections												
Circuit A												
Suction line diameter	in	1-3/8	1-3/8	1-3/8	1-3/8	1-3/8	1-3/8	1-5/8	1-5/8	1-5/8	1-5/8	1-5/8
Liquid line diameter	in	5/8	5/8	5/8	5/8	5/8	5/8	7/8	7/8	7/8	7/8	7/8
Circuit B												
Suction line diameter	in	-	-	-	-	-	-	-	-	-	1-5/8	1-5/8
Liquid line diameter	in	-	-	-	-	-	-	-	-	-	7/8	7/8
Chassis paint colour		Colour code: RAL 7035										

* Nominal evaporating temperature condition: 5°C, outdoor air temperature 35°C, superheat 5 K, 15 m equivalent length
** Weight shown is a guideline only.
*** In accordance with ISO 9614-1.
**** For information, calculated from the sound power level Lw(A).

Sound spectrum

Standard units

38RBS	Octave bands, Hz	125	250	500	1k	2k	4k	Sound power level	
039	dB	77.0	78.9	78.5	75.1	71.9	67.2	dB(A)	80
045	dB	77.0	79.0	78.7	76.0	72.8	67.3	dB(A)	81
050	dB	77.0	79.0	78.9	76.0	72.4	67.8	dB(A)	81
060	dB	77.0	78.9	78.7	76.0	73.4	68.8	dB(A)	81
070	dB	81.3	83.5	84.4	82.9	76.9	72.6	dB(A)	87
080	dB	81.3	83.5	84.5	82.9	77.2	71.7	dB(A)	87
090	dB	80.0	81.9	81.6	78.7	75.9	70.7	dB(A)	84
100	dB	80.0	81.9	81.7	78.8	76.1	73.7	dB(A)	84
120	dB	80.0	81.9	81.8	78.9	76.8	71.4	dB(A)	84
140	dB	84.3	86.5	87.4	85.9	79.9	75.6	dB(A)	90
160	dB	84.3	86.5	87.5	85.9	80.2	74.1	dB(A)	90

Units with option 15LS (very low sound level)

38RBS	Octave bands, Hz	125	250	500	1k	2k	4k	Sound power level	
039	dB	77.0	78.9	78.4	74.5	69.7	62.6	dB(A)	79
045	dB	77.0	78.9	78.5	74.6	70.0	62.7	dB(A)	80
050	dB	77.0	78.9	78.5	74.6	69.9	63.1	dB(A)	80
060	dB	77.0	78.9	78.4	74.7	70.4	63.8	dB(A)	80
070	dB	77.0	78.9	78.5	74.7	70.5	66.2	dB(A)	80
080	dB	77.0	78.9	78.5	74.7	70.9	64.3	dB(A)	80
090	dB	80.0	81.9	81.4	77.6	73.1	66.0	dB(A)	83
100	dB	80.0	81.9	81.5	77.6	73.2	68.3	dB(A)	83
120	dB	80.0	81.9	81.5	77.6	73.5	66.5	dB(A)	83
140	dB	80.0	81.9	81.5	77.7	73.5	69.2	dB(A)	83
160	dB	80.0	81.9	81.5	77.7	73.5	67.3	dB(A)	83

Operating limits, standard units

Operating range

38RBS		Minimum	Maximum
Evaporator			
Suction temperature (dew point)	°C	-5	15
Condenser			
Entering air temperature*	°C	-10	48

* For transport and storage of the 38RBS units the minimum and maximum allowable temperatures are -20°C and +48°C. It is recommended that these temperatures are used for transport by container. Option 28 allows stable unit operation at air temperatures below -10°C and down to -20°C.

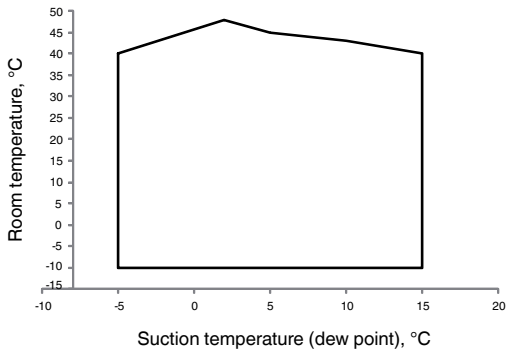

Electrical data

38RBS		039	045	050	060	070	080	090	100	120	140	160
Power circuit												
Nominal power supply	V-ph-Hz	400-3-50										
Voltage range	V	360-440										
Control circuit supply		24 V, via internal transformer										
Maximum start-up current (Un)*												
Standard unit	A	114.2	132.4	141.3	143.7	170.4	209.4	169.4	196.4	240.4	226.2	275.2
Unit with electronic starter option	A	74.7	86.5	93.8	96.2	114.4	139.8	-	-	-	-	-
Unit power factor at maximum capacity**		0.83	0.81	0.81	0.83	0.81	0.78	0.83	0.81	0.79	0.81	0.78
Maximum unit power input**	kW	19.5	22.3	24.5	27.9	31.2	35.8	42.3	45.6	52.5	62.4	71.6
Nominal unit current draw***	A	33.2	37.6	42.8	44.2	55.0	62.6	67.7	80.6	91.4	110.0	124.4
Maximum unit current draw (Un)****	A	35.6	40.0	43.8	48.6	55.8	65.8	74.3	81.8	96.8	11.6	131.6
Maximum unit current draw (Un-10%)†	A	38.0	49.0	51.2	57.8	73.2	79.8	88.1	107.9	117.9	146.4	159.6
Customer-side unit power reserve	kW	Customer reserve at the 24 V control power circuit										
Short-circuit stability and protection		See table "Short-circuit stability current" below										

* Maximum instantaneous start-up current at operating limit values (maximum operating current of the smallest compressor(s) + fan current + locked rotor current of the largest compressor).
** Power input, compressors and fans, at the unit operating limits (saturated suction temperature 15°C, saturated condensing temperature 65°C) and nominal voltage of 400 V (data given on the unit nameplate).
*** Nominal conditions: suction temperature 5°C, outside air temperature 35°C.
**** Maximum unit operating current at maximum unit power input and 400 V (values given on the unit nameplate).
† Maximum unit operating current at maximum unit power input and 360 V.

Short-circuit stability current (TN system*) - standard unit (with main disconnect without fuse)

38RBS	039	045	050	060	070	080	090	100	120	140	160
Value with unspecified upstream protection											
Short-term current at 1 s - Icw - kA rms	3.36	3.36	3.36	3.36	3.36	3.36	5.62	5.62	5.62	5.62	5.62
Admissible peak current - Ipk - kA pk	20	20	20	20	20	15	20	20	15	20	15
Max. value with upstream protection (circuit breaker)											
Conditional short-circuit current Icc - kA rms	40	40	40	40	40	40	40	40	40	30	30
Schneider circuit breaker - Compact series	NS100H	NS100H	NS100H	NS100H	NS100H	NS100H	NS100H	NS160H	NS160H	NS250H	NS250H
Reference number**	29670	29670	29670	29670	29670	29670	29670	30670	30670	31671	31671

* Earthing system type
** If another current limitation protection system is used, its time-current and thermal constraint (I^2t) trip characteristics must be at least equivalent to those of the recommended Schneider circuit breaker. Contact your nearest Carrier office.
The short-circuit stability current values above are in accordance with the TN system.

Electrical data and operating conditions notes

- 38RBS 039-160 units have a single power connection point located immediately upstream of the main disconnect switch.
- The control box includes the following standard features:
  - a main circuit breaker/disconnect switch,
  - starter and motor protection devices for each compressor, the fans and the pump,
  - the control devices.
- Field connections:
  All connections to the system and the electrical installations must be in full accordance with all applicable local codes.
- The 38RBS units are designed and built to ensure conformance with these codes. The recommendations of European standard EN 60204-1 (machine safety - electrical machine components - part 1: general regulations - corresponds to IEC 60204-1) are specifically taken into account, when designing the electrical equipment.

NOTES:

- Generally the recommendations of IEC 60364 are accepted as compliance with the requirements of the installation directives. Conformance with EN 60204-1 is the best means of ensuring compliance with the Machines Directive § 1.5.1.
- Annex B of EN 60204-1 describes the electrical characteristics used for the operation of the machines.

- The operating environment for the 38RBS units is specified below:

1. Environment* - Environment as classified in EN 60721 (corresponds to IEC 60721):
   - outdoor installation*
   - ambient temperature range: -10°C to +48°C, class 4K4H
   - altitude: ≤ 2000 m
   - presence of hard solids, class 4S2 (no significant dust present)
   - presence of corrosive and polluting substances, class 4C2 (negligible)
2. Power supply frequency variation: ± 2 Hz.
3. The neutral (N) conductor must not be connected directly to the unit (if necessary use a transformer).
4. Overcurrent protection of the power supply conductors is not provided with the unit.
5. The factory-installed disconnect switch is of a type suitable for power interruption in accordance with EN 60947.
6. The units are designed for connection to TN(S) networks (IEC 60364). For IT networks the earth connection must not be at the network earth. Provide a local earth, consult competent local organisations to complete the electrical installation.

Caution: If particular aspects of an actual installation do not conform to the conditions described above, or if there are other conditions which should be considered, always contact your local Carrier representative.

* The required protection level for this class is IP43BW (according to reference document IEC 60529). All 38RBS units are protected to IP44CW and fulfil this protection condition.

Dimensions/clearances

38RBS 039-080

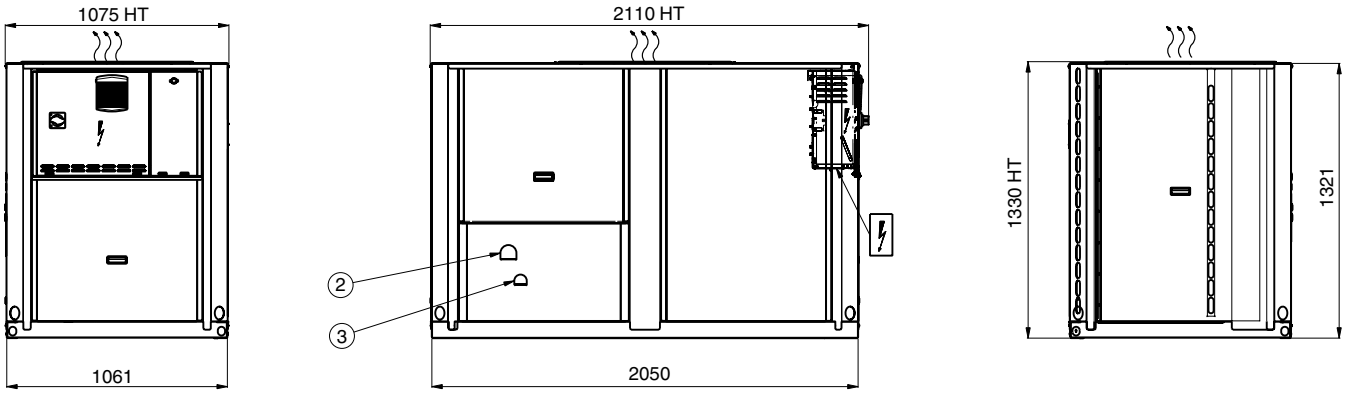

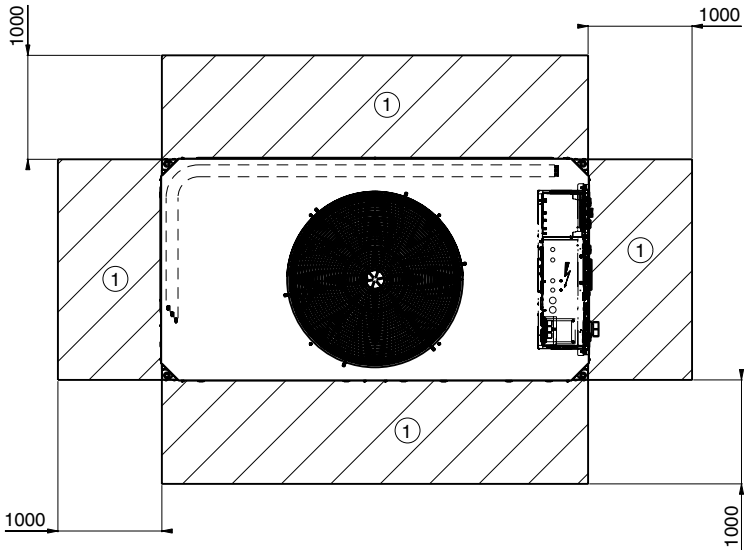

Legend:
All dimensions are given in mm.

(1) Required space for maintenance

(2) Refrigerant inlet

(3) Refrigerant outlet

Power wiring connection

Power supply

Air outlet, do not obstruct

NOTES:

A Non-certified drawings.
Refer to the certified dimensional drawings supplied with the unit or available on request, when designing an installation.

For the location of fixing points, weight distribution and coordinates of the centre of gravity refer to the certified dimensional drawings.

B In multiple-unit installations (maximum four units), the side clearance between the units should be increased from 1000 to 2000 mm.

C The height of the solid surface must not exceed 2 m.

Dimensions/clearances

38RBS 090-120

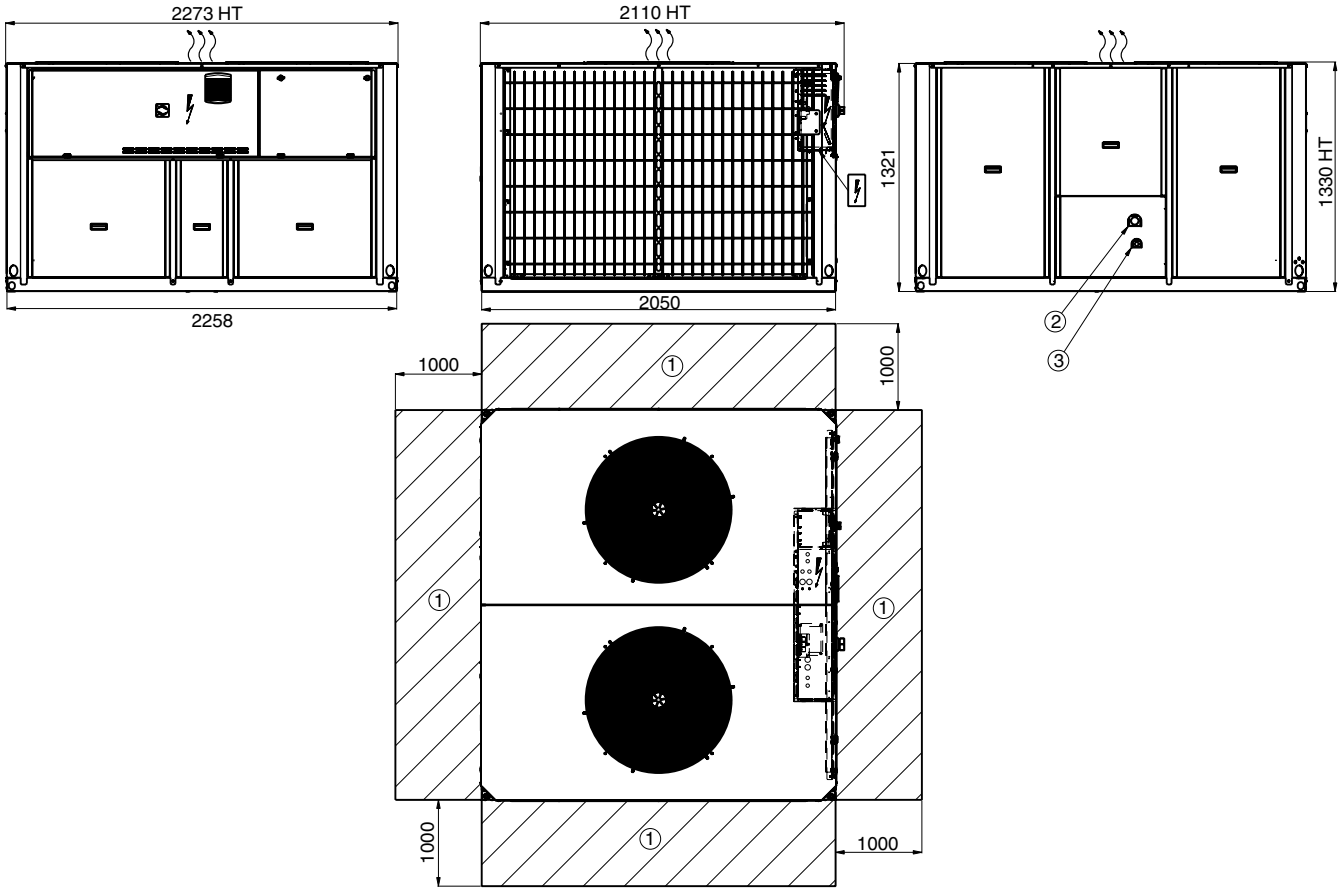

38RBS 140-160

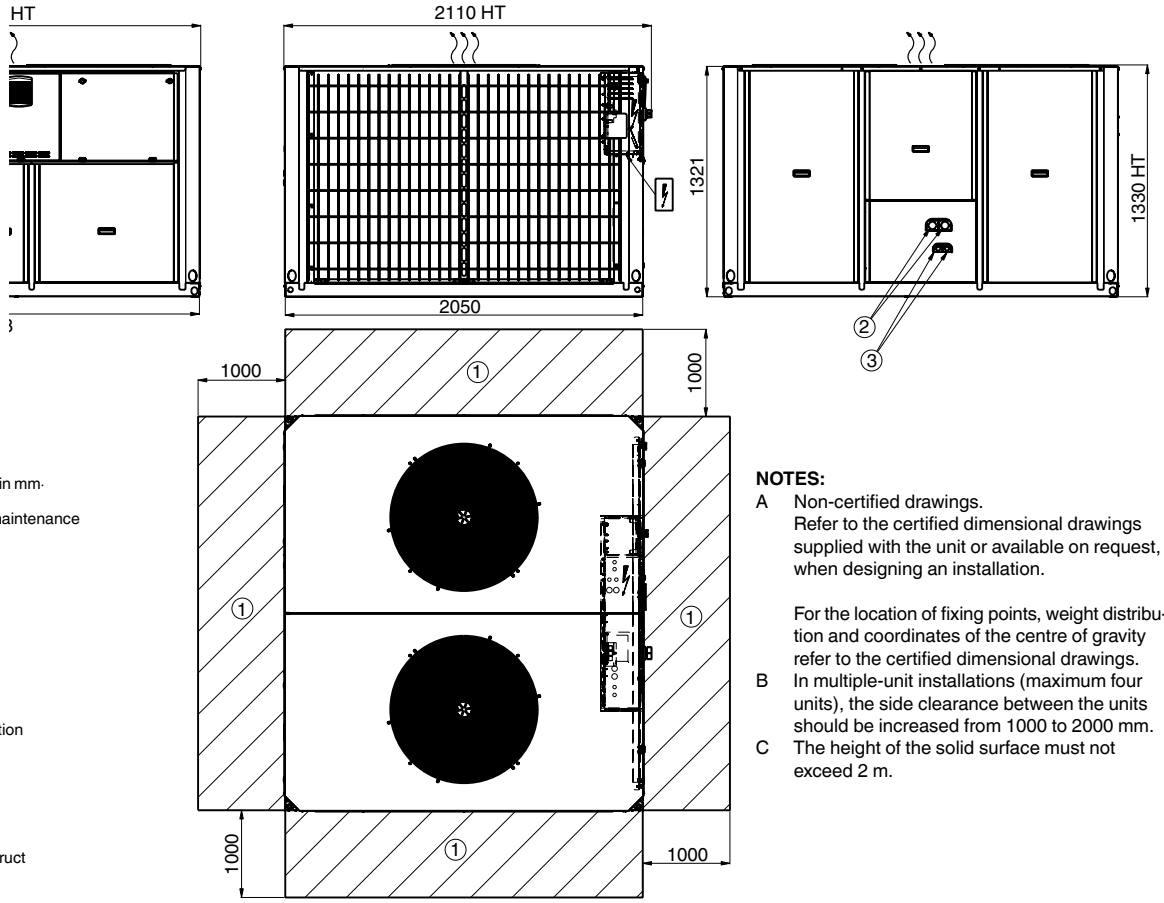

Legend:
All dimensions are given in mm.

- (1) Required space for maintenance
- (2) Refrigerant inlet
- (3) Refrigerant outlet
- Power wiring connection
- Power supply
- Air outlet, do not obstruct

NOTES:

A Non-certified drawings.
Refer to the certified dimensional drawings supplied with the unit or available on request, when designing an installation.

For the location of fixing points, weight distribution and coordinates of the centre of gravity refer to the certified dimensional drawings.

B In multiple-unit installations (maximum four units), the side clearance between the units should be increased from 1000 to 2000 mm.

C The height of the solid surface must not exceed 2 m.

Cooling capacities

		Entering air temperature, °C																	
38RBS	SET	20			25			30			35			40			45		
		CAP	UNIT	EER	CAP	UNIT	EER	CAP	UNIT	EER	CAP	UNIT	EER	CAP	UNIT	EER	CAP	UNIT	EER
	°C	kW	kW	kW/kW	kW	kW	kW/kW	kW	kW	kW/kW	kW	kW	kW/kW	kW	kW	kW/kW	kW	kW	kW/kW
039	-2.5	36.7	10.0	3.67	35.2	10.8	3.25	33.6	11.7	2.87	31.9	12.8	2.49	29.7	14.1	2.11	15.2	7.3	2.07
045		41.8	11.4	3.67	40.1	12.5	3.21	38.4	13.8	2.78	35.9	15.3	2.35	32.7	16.8	1.95	17.0	8.6	1.97
050		49.0	13.3	3.69	46.5	14.6	3.19	43.9	16.1	2.73	40.7	17.8	2.29	37.3	19.7	1.89	19.4	10.0	1.95
060		54.2	15.1	3.58	51.7	16.6	3.12	48.9	18.3	2.67	45.1	20.2	2.23	41.0	22.3	1.84	21.8	10.9	2.01
070		62.9	17.2	3.65	60.0	18.7	3.21	56.7	20.4	2.78	52.8	22.2	2.37	48.4	24.4	1.99	25.7	12.4	2.08
080		72.9	20.6	3.53	69.5	22.0	3.16	66.0	23.6	2.79	62.2	25.4	2.45	58.0	27.5	2.11	31.2	13.7	2.27
090		83.6	22.5	3.72	80.1	24.4	3.28	76.0	26.9	2.83	70.9	29.5	2.40	64.9	32.4	2.00	42.6	22.4	1.90
100		94.9	25.3	3.76	90.7	27.5	3.30	85.8	30.0	2.86	80.0	32.8	2.44	73.7	36.0	2.05	49.6	24.3	2.04
120		114.3	30.4	3.76	108.4	32.7	3.31	102.1	35.6	2.87	95.1	38.7	2.46	87.6	42.5	2.06	58.4	29.6	1.98
140		131.9	35.3	3.73	125.8	38.3	3.29	118.6	41.7	2.85	110.5	45.6	2.43	101.3	49.9	2.03	53.4	25.2	2.11
160		151.0	42.2	3.58	143.4	45.3	3.17	135.1	49.0	2.76	126.2	53.1	2.38	116.6	58.1	2.01	61.5	28.8	2.14
039	0	39.8	10.3	3.87	38.2	11.1	3.44	36.5	12.0	3.04	34.6	13.1	2.64	32.2	14.4	2.24	29.6	15.9	1.86
045		45.4	11.7	3.89	43.6	12.8	3.41	41.8	14.1	2.96	39.1	15.6	2.51	35.7	17.1	2.09	32.1	18.7	1.72
050		53.2	13.5	3.93	50.6	14.8	3.41	47.8	16.4	2.93	44.5	18.0	2.47	40.8	20.0	2.04	36.7	22.2	1.66
060		58.9	15.4	3.82	56.3	16.8	3.34	53.4	18.6	2.87	49.4	20.5	2.40	45.0	22.7	1.99	40.3	25.1	1.61
070		68.3	17.8	3.83	65.1	19.3	3.38	61.5	20.9	2.95	57.3	22.7	2.52	52.6	24.9	2.11	47.3	27.1	1.74
080		79.1	21.5	3.69	75.1	23.0	3.27	70.9	24.8	2.86	66.6	26.6	2.50	62.1	28.7	2.16	57.4	31.1	1.85
090		90.8	23.1	3.94	87.0	25.1	3.47	82.7	27.5	3.00	77.1	30.2	2.55	70.8	33.2	2.13	64.0	36.4	1.76
100		102.9	26.1	3.94	98.3	28.4	3.46	93.0	30.9	3.01	86.7	33.8	2.57	80.0	37.0	2.16	54.3	24.7	2.20
120		123.4	31.9	3.87	117.3	34.1	3.44	110.8	36.5	3.04	103.4	39.6	2.61	95.4	43.3	2.20	63.9	29.9	2.13
140		143.2	36.7	3.90	136.5	39.6	3.44	128.9	42.9	3.00	119.9	46.6	2.57	110.0	51.0	2.16	98.9	55.6	1.78
160		164.3	43.7	3.76	155.9	46.9	3.33	147.0	50.5	2.91	137.3	54.6	2.51	126.8	59.5	2.13	115.6	65.0	1.78
039	5	46.4	10.9	4.25	44.6	11.8	3.78	42.6	12.7	3.35	40.4	13.8	2.92	37.7	15.1	2.49	34.6	16.7	2.08
045		53.0	12.3	4.31	51.0	13.5	3.79	49.0	14.9	3.30	45.9	16.3	2.81	42.0	17.8	2.37	38.0	19.3	1.96
050		62.2	14.7	4.23	59.3	16.0	3.71	56.1	17.4	3.22	52.4	19.0	2.75	48.3	20.8	2.32	43.7	22.8	1.92
060		69.2	16.0	4.32	66.3	17.5	3.80	63.0	19.3	3.27	58.5	21.2	2.76	53.6	23.4	2.29	48.3	25.8	1.87
070		80.0	19.3	4.14	76.1	20.9	3.65	71.7	22.5	3.18	66.7	24.4	2.74	61.3	26.4	2.33	55.3	28.4	1.95
080		93.0	23.3	4.00	88.3	25.0	3.54	83.3	26.8	3.11	77.9	28.8	2.70	72.2	31.1	2.32	65.9	33.6	1.96
090		106.1	24.5	4.34	101.8	26.5	3.84	96.9	29.1	3.33	90.4	31.8	2.84	83.3	34.8	2.39	75.6	38.1	1.98
100		120.2	28.0	4.29	114.6	30.4	3.77	108.2	33.0	3.28	100.9	36.0	2.81	93.0	39.2	2.37	84.3	42.6	1.98
120		143.0	34.9	4.10	135.6	37.7	3.60	127.6	40.8	3.13	119.4	43.6	2.74	110.6	46.7	2.37	101.2	49.9	2.03
140		167.9	39.6	4.24	159.7	42.9	3.72	150.2	46.4	3.24	139.6	50.2	2.78	128.1	54.2	2.36	115.5	58.4	1.98
160		192.4	47.4	4.06	183.3	50.8	3.61	173.0	54.6	3.17	161.7	58.7	2.75	149.5	63.5	2.36	136.4	68.6	1.99
039	10	53.8	11.6	4.63	51.7	12.5	4.13	49.4	13.5	3.66	46.7	14.6	3.20	43.5	16.0	2.73	23.1	7.7	3.00
045		61.4	13.1	4.68	59.1	14.4	4.12	56.8	15.8	3.59	53.0	17.3	3.07	48.6	18.7	2.60	26.5	9.0	2.95
050		72.5	15.5	4.66	69.2	17.0	4.07	65.3	18.6	3.50	60.7	20.6	2.95	56.0	22.4	2.49	29.9	10.5	2.86
060		80.2	16.9	4.75	77.0	18.3	4.21	73.3	20.1	3.65	68.5	22.0	3.11	63.0	24.2	2.60	57.0	26.7	2.14
070		93.4	20.2	4.62	88.8	21.9	4.06	83.4	23.8	3.51	77.3	26.0	2.97	70.5	28.4	2.48	38.9	13.3	2.92
080		108.7	24.3	4.48	103.3	26.3	3.93	97.4	28.4	3.42	91.0	30.9	2.95	84.2	33.6	2.51	47.6	14.9	3.20
090		122.9	26.2	4.69	117.9	28.3	4.16	112.2	31.1	3.61	104.6	33.8	3.09	96.5	36.8	2.62	66.3	24.0	2.77
100		139.1	30.3	4.59	132.5	32.8	4.04	124.7	35.4	3.52	116.3	38.5	3.02	107.0	41.7	2.57	75.2	26.7	2.82
120		164.4	37.2	4.42	155.9	40.2	3.88	146.7	43.3	3.39	136.9	46.8	2.92	126.3	50.7	2.49	88.5	31.9	2.77
140		196.0	41.4	4.73	186.4	44.8	4.16	175.0	48.6	3.60	162.0	53.2	3.05	147.5	58.2	2.54	80.7	27.1	2.97
160		217.6	52.5	4.15	207.3	56.1	3.70	196.5	59.9	3.28	185.0	64.1	2.89	172.9	68.6	2.52	125.1	52.3	2.39
039	15	61.9	12.5	4.97	59.5	13.4	4.45	56.8	14.3	3.96	53.7	15.5	3.47	50.1	16.8	2.98	26.9	8.0	3.39
045		70.2	14.0	5.00	67.7	15.4	4.41	64.7	16.9	3.84	60.5	18.4	3.29	55.5	19.7	2.82	31.1	9.2	3.39
050		83.9	16.3	5.16	80.2	17.7	4.54	75.9	19.3	3.94	70.8	21.2	3.34	65.1	23.4	2.79	35.1	10.7	3.28
060		92.0	18.0	5.10	88.2	19.5	4.53	84.1	21.3	3.94	78.5	23.3	3.37	72.5	25.4	2.86	38.8	12.2	3.18
070		108.1	21.2	5.09	102.9	22.8	4.51	96.8	24.7	3.92	89.7	26.9	3.33	81.9	29.4	2.79	45.3	13.7	3.30
080		126.1	25.3	4.98	119.9	27.4	4.37	113.1	29.7	3.81	105.9	32.1	3.29	98.1	34.8	2.82	55.1	15.5	3.56
090		141.2	28.2	5.00	135.4	30.5	4.43	128.4	33.3	3.86	119.7	36.1	3.32	110.5	39.2	2.82	76.9	24.9	3.08
100		159.5	33.1	4.82	151.5	35.5	4.26	142.4	38.3	3.72	132.6	41.4	3.20	121.9	44.6	2.73	87.0	27.9	3.12
120		187.4	39.7	4.72	177.6	42.8	4.15	167.0	46.1	3.63	155.6	49.6	3.14	143.5	53.4	2.69	102.7	33.1	3.10
140		227.0	43.6	5.21	215.9	46.8	4.61	203.0	50.6	4.01	188.1	55.1	3.41	171.6	60.1	2.85	93.6	28.0	3.36
160		243.3	58.4	4.17	231.4	62.1	3.72	218.8	66.2	3.31	205.7	70.5	2.92	153.2	52.4	2.92	108.0	32.8	3.29

Legend
SET Saturated evaporating temperature (dew point), °C
CAP kW Cooling capacity
UNIT kW Gross unit power input (compressors, fans, control)

Application data
Standard units, refrigerant R-410A
Evaporation superheat: 5 K
Equivalent length without filter drier and solenoid valves: 15 m.

Order No.: 13850-20.06.2012. Supersedes order No.: New
Manufacturer reserves the right to change any product specifications without notice.

Manufactured by: Carrier SCS, Montluel, France.
Printed in the European Union.