Carrier

Packaged Rooftop Cooling Only Units, Heat Pumps and Gas Heating Units

PRO-DIALOG

EUROVENT CERTIFIED PERFORMANCE
www.eurovent-certification.com

w.eurovent-certification.com
www.certiflash.com

48/50UA-UH

Nominal cooling capacity 44 to 115 kW
Nominal heating capacity 44 to 121 kW

The packaged rooftop units are flexible and efficient air conditioners, designed for outdoor installations. The units are self-contained and can be installed in commercial and industrial applications.

- 50UA/UH units are packagd rooftop cooling units/reversible heat pumps, available with additional heating options (hot-water coil or electric heaters).
- 48UA/UH units are packagd rooftop cooling units/ reversible heat pumps, factory fitted with a multi-stage gas heater.

Environmentally sound refrigerant choice

- R410A refrigerant is
  - a chlorine-free refrigerant of the HFC group with a zero ozone depletion potential,
  - a high-density refrigerant, therefore less refrigerant is required,
  - very efficient: it gives an increased energy efficiency ratio (EER, COP and part load efficiencies).

Features

These new rooftop units integrate the latest technological innovations:
- state-of-the-art scroll compressor technology,
- low-noise fans made of composite material,
- auto-adaptive Pro-Dialog+ microprocessor control

Superior reliability, efficiency and safety

- State-of-the-art concept
  - Reduced size and weight make these units ideal for today's lightweight building structures.
  - Rugged design of critical components. e.g. motor supports, suction/discharge piping etc.
  - Powder-painted sheet metal, especially suitable for outdoor use (light-grey colour RAL 7035).
- Exceptional endurance tests
  - Corrosion resistance tests in salt mist in the laboratory.
  - Accelerated ageing test on components that are submitted to continuous operation: compressor piping, fan supports.
  - Low vibration design.
  - Transport simulation tested in real conditions.
- Leak-tight refrigerant circuit
  Using the latest refrigerant circuit technology for Carrier Aquasnap chillers:
  - Brazed refrigerant connections for increased leak tightness.
  - Reduction of leaks due to reduced vibration levels and elimination of capillary tubes.
  - Access to pressure transducers and temperature sensors without losing refrigerant charge.

- Compressors
  - Excellent full and part-load efficiencies achieved with multiple scroll compressors and indoor coils with dual refrigerant circuits. The refrigerant circuits are both electrically and mechanically independent, to provide standby capability should one circuit require service. Totally enclosed outdoor fan motors are designed for many years of trouble-free operation.
  - Increased energy efficiency at part load, around 99% of the operating time. Only compressors that are absolutely necessary operate. At these conditions the compressors operating are more energy-efficient, as they use the total condenser and evaporator capacity.
  - Low-noise scroll compressors with low vibration levels.
  - The compressor assembly is installed on an independent chassis and supported by anti-vibration mountings.
  - Dynamic suction minimising vibration transmission.
  - Crankcase heaters are standard for all units.

Compressor

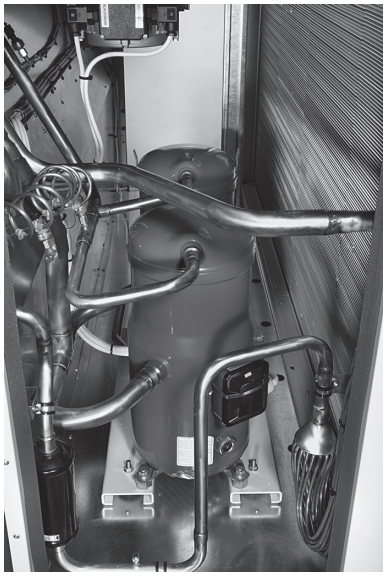

- Outside condenser/evaporator coil section
  - Vertical outside coils made of high-quality staggered copper tubing, mechanically bonded in pre-coated corrugated aluminium fins, with high-level protection against corrosion and UV.
  - Latest generation low-noise Flying Bird IV fans, made of a composite material (Carrier patent) - now even quieter and generating intrusive low-frequency noise.
  - At part load or low outdoor temperatures the fan automatically switches to the low speed. The two-speed fan motor allows adjustment of the fan speed for optimised efficiency.
  - Defrost is optimised by the auto-adaptive algorithm. This and the new coil design reduce the defrost cycle duration by an average of 50%. For increased safety an electric heater prevents accumulation of ice on the air heat exchanger base.
  - All pipes and refrigeration components are welded. Pressure sensors are mounted directly on the pipes.
  - Double-inlet indoor fans have forward-curved blades.

Condenser/evaporator coils

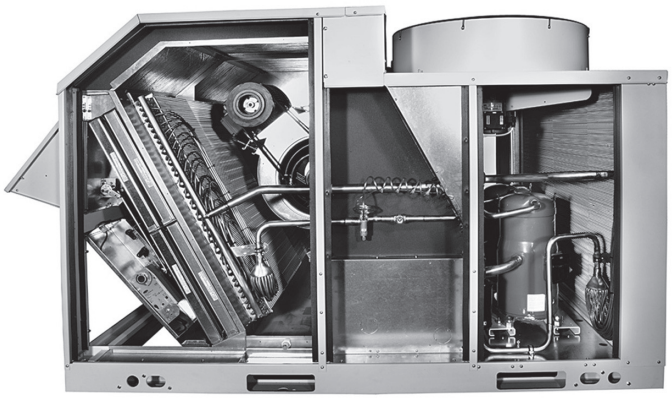

- Simplified wiring
  - Electrical connections are simplified, and standard equipment includes a main disconnect switch and a single entry point of the three-phase without neutral power supply to the whole unit.
  - The units are fully wired in accordance with EN standards and include thermo-magnetic circuit breakers and a main disconnect switch.
  - Transformer for safe 24 V control circuit supply included.

Simplified electrical connections

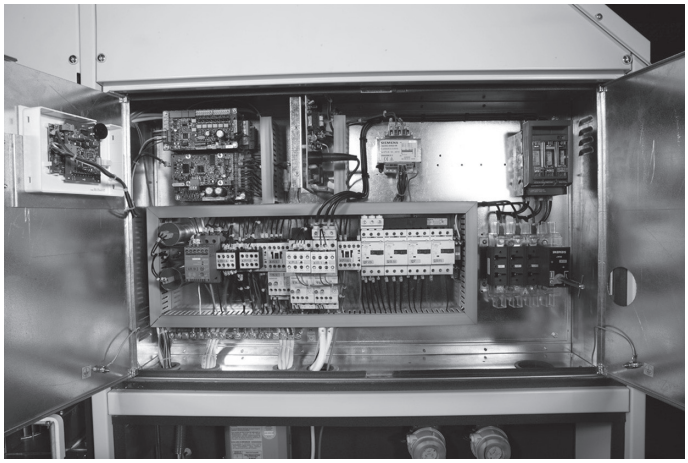

Pro-Dialog+ user interface

Pro-Dialog+ is an advanced numeric control system that combines complex intelligence with great operating simplicity. Pro-Dialog+ constantly monitors all machine parameters, optimising the operation of compressors, fans and reversing valve for optimum energy efficiency.

Pro-Dialog+ interface

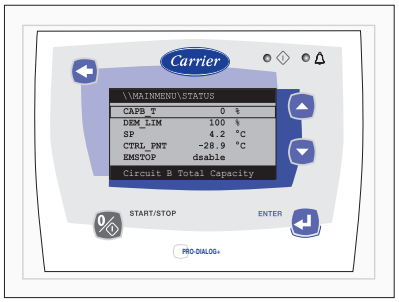

- A powerful control system
  - The Pro-Dialog+ control is auto-adaptive and guarantees total compressor protection. The system permanently checks the operating parameters and responds simultaneously to avoid excessive cycling and maintain the ideal operating range for the compressor (temperatures and pressures out of range, etc.). By taking corrective action before the fault occurs, the auto-adaptive control frequently prevents a shutdown due to a fault.
  - The Pro-Dialog+ control allows communication via JBus and LonWorks - if the necessary hardware is provided.
- Energy management
  - Internal seven-day time schedule clock permits unit on/off control.
  - To optimise power consumption, Pro-Dialog+ automatically resets the space temperature setpoint in accordance with the outdoor air temperature or uses a second setpoint (example: occupied/unoccupied mode).
  - Master/slave control of up to six units operating in parallel (a serial RS485 communication port) with operating time equalisation and automatic changeover in case of a unit fault (accessory).
  - Automatic changeover based on the outside air temperature
- Integrated features
  - Night mode: capacity and fan speed limitation for reduced noise levels.
- Ease-of-use
  - The new backlit LCD interface includes a manual control potentiometer to ensure legibility under any lighting conditions.
  - The information is displayed clearly in English, French, German, Italian or Spanish (for other languages please contact Carrier).
  - The Pro-Dialog+ navigation uses intuitive tree-structure menus, similar to internet browsers. They are user-friendly and permit quick access to the main operating parameters: number of compressors operating, suction/discharge pressure, compressor operating hours, setpoint, air temperature.
- Carrier Comfort Network (CCN) operating mode
  - A simple two-wire communication bus between the RS485 port of the rooftop unit and the Carrier Comfort Network offers multiple remote control, monitoring and diagnostic possibilities. Carrier offers a vast choice of control products, specially designed to control, manage and supervise the operation of an air conditioning system. Please consult your Carrier representative for more information on these products.
- Remote operating mode with volt-free contacts (standard)
  - Start/stop: opening of this contact will shut down the unit.
  - Dual setpoint: closing of this contact activates a second setpoint (example: unoccupied mode).
  - Additional frost protection setpoint is available to protect the building at low temperature.
  - Alarm indication: this volt-free contact indicates and indentifies major faults that may lead to the shutdown of one or two refrigerant circuits.
  - Demand limit can be used to reduce the maximum unit capacity to pre-defined values, using volt-free contacts.
  - User safety: this contact can be used for any customer safety loop. Closing the contact generates a specific alarm.
- Remote interface (accessory)
  - This interface allows access to the same menus as the unit interface and can be installed up to 300 m away. This accessory includes a box that can be mounted inside the building. The power supply is provided via a 220 V/24 V transformer supplied.

IAQ options and economizer

- Fresh air sliding panel
- Manual outdoor air damper
- Economizer
  - An optional integrated economizer permits cooling utilising an outdoor air sensor. The direct gear-driven, low-leakage blades eliminate conventional inter-blade linkages and associated adjustments.
  - The economizer operates in conjunction with mechanical cooling, when required, and is factory-installed for either vertical or horizontal operation. The factory-supplied and field-installed rain hood/filter assembly is designed to prevent moisture or objects from entering the unit.
  - Pro-Dialog+ control has been designed to support the requirements of indoor air quality control, using outside air. Units can either be equipped with an adjustable, self-closing outside air economizer or a fully modulating economizer. The economizer can be configured for a full modulation mode or three-position operating mode. The control includes a logic for a minimum ventilation position and different setpoints for occupied and unoccupied minimum position setpoints.
  - Pro-Dialog+ also has a logic built-in to calibrate the economizer position to the actual percentage of outside air introduced. During periods when the compressors are not being used the control will use the return air temperature, supply air temperature and outside air temperature to calibrate the economizer. This will allow setting the actual outside air percentage and not just the percent damper position.
  - The software controls the power exhaust stages based on the economizer position (percent open).

Economizer

- Thermostatic and enthalpy control with the economizer (option). Two types of control are available:
  - dry-bulb temperature differential,
  - enthalpy differential.

  Normally the units provided with an economizer are factory-fitted with an outdoor air and return air temperature sensor. For outdoor enthalpy control the economizer is provided with two enthalpy sensors for optimum temperature and humidity control.
- Power exhaust option

  This prevents space pressurisation problems. When operating with outside air economizers, large amounts of air can be introduced into the building and a means for building pressure relief must be provided. The 48/50UA-UH series control supports the following three building pressure control types:
  - Barometric relief damper: can be used on low return duct static applications.
  - Centrifugal exhaust fan for exhaust air, running when the fresh air inlet reaches 50% of the fresh air requirement (factory-fitted to the unit).

- Minimised over-pressure in the building when fresh air is introduced, allows additional exhaust air pressure for medium return ductwork pressure drop.

Power exhaust option

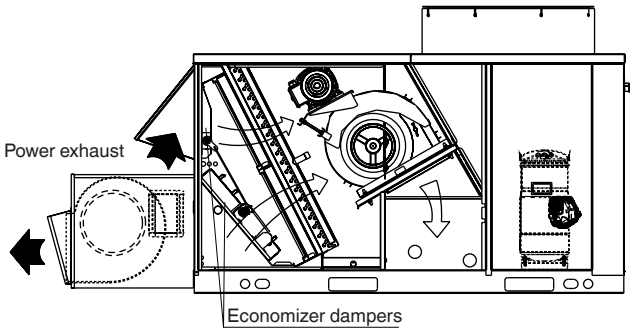

- CO_2 sensors
  - The indoor air quality (IAQ) function provides a demand-based control for ventilation air quantity, by using a modulating outside air damper position that is proportional to the space CO_2 level. The ventilation damper position is varied between a minimum ventilation level (based on internal sources of contaminants and CO_2 levels other than the effect of people) and the maximum design ventilation level (determined at maximum occupancy of the building).
- Filtration solutions
  - The units can use either standard G4 filters or an optional two-stage pre-filter and G4 + F7 or F6 + F7 high-efficiency filters (all fire class M1). They can also have an optional filter pressure drop switch to warn if the filter is dirty.
  - Filter recommendations according to EN 13779: After the outdoor air quality has been determined, EN 13779 clearly specifies the filter class required to achieve the preferred indoor air quality. Filter classes are specified in accordance with EN 779-2002.

Standard filters

Optional two-stage pre-filter and filter

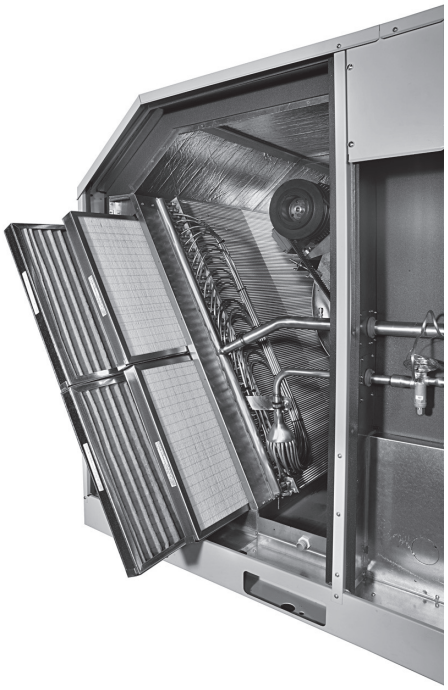

Outdoor air quality	IDA3 (better)	IDA4 (good)
ODA1 (good)	F7	F5
ODA2	F5/F7	F5/F6
ODA3	F5/F7	F5/F6
ODA4 (poor)	F6/F7	F4/F6

The outdoor air is categorised in four levels (ODA1 to ODA4) depending on air pollution through particles and gases.

The indoor air is categorised in four levels. For rooftop applications the most common ones are:
- IDA3 (commercial buildings, cinemas., theatres, restaurants, bars, sport halls)
- IDA4 (industrial buildings and warehouses).

If units are installed in an environment where filters need to be replaced more frequently, it is recommended to use two-stage particle filtration for hygiene reasons.

- Fire and smoke control option
  - The unit can be equipped with an optional return air smoke detector. The smoke detector is wired to stop the unit and send a message to a remote alarm system if a fault condition is detected. If the control expansion module is added, the control will support smoke control modes including evacuation, smoke purge, and pressurisation.

Gas heating solutions (48UA/UH only)

- Gas heating
  - The gas heating system is designed to be used as an environmentally friendly alternative to the hot-water coil or electric heating options. The 48UA/UH rooftop unit is available with three gas heating modules with multi-step heating for natural gas and liquid propane gas.

Gas heating solution

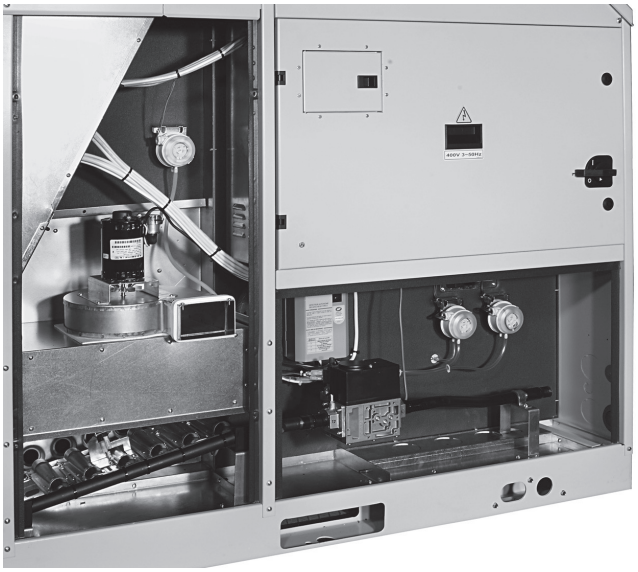

- Tubular, dimpled gas heat exchanger with Alumagard™
  - This heat exchanger optimises the heat transfer for maximum efficiency. The tubular design permits hot gases to make multiple passes across the path of the supply air. The dimpled design creates a turbulent gas flow to maximise heating efficiency. The extra-thick Alumagard™ heat exchanger coating provides corrosion resistance and ensures long heat exchanger life.

Tubular dimpled gas heat exchanger

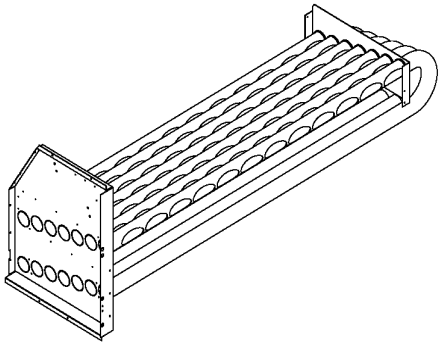

- Modular heater compartment
  - The heater assembly consists of a series of injectors. The gas-air mixture, prepared in the heaters, enables excellent combustion within the heat exchanger tubes. The direct-spark ignition system saves operating expense compared to pilot ignition systems. No crossover tube is required, therefore no sooting or pilot fouling problems can occur.

Modular heater compartment

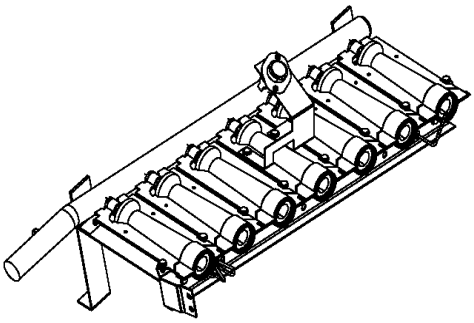

- Induced draft combustion system
  - This system eliminates the unsightly appearance of flue stacks and minimises the effects of wind on heating operations. The inducer fan draws hot combustion gas through the heat exchanger at the optimum rate for the most effective heat transfer. For improved efficiency the heat exchanger operates under negative pressure, preventing flue gas leakage into the indoor supply air.

Induced draft combustion system

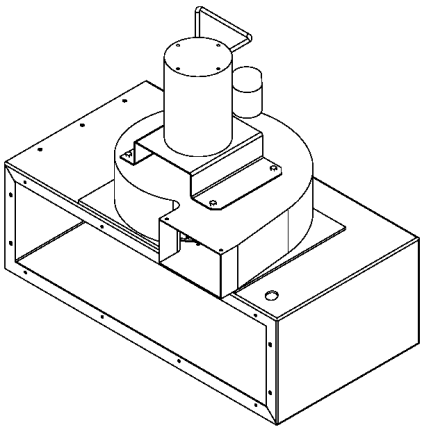

- Staged gas unit heating
  - Tempering of supply air is desirable when rooftop units are operating at low outdoor temperatures. In these conditions the tempering function adds incremental heat capacity steps to raise the mixed air temperature to levels suitable for direct admission into the occupied space or to levels consistent with the reheat capabilities of the space terminals.
  - The gas heating system uses multiple heating sections. Each section is equipped with a two-stage gas valve. The gas valves are sequenced by a factory-installed integrated gas controller (IGC) with CE mark, as required to maintain the user-specified room temperature. Up to three heating control stages are available, based on quantity and heating capacity of the individual heat exchanger sections provided in the base unit.
- Safety built-in
  The heating safety controls will shut down the unit if they detect a problem. Six safety levels are operating:
  - Temperature limit switch for indoor fan shutdown failure.
  - High-temperature limit switch for reduced air flow.
  - Air pressure switch to ensure sufficient combustion gas flow.
  - Rollout switch to avoid flame rollout.
  - Flame detection by ionisation to quickly sense the heater flame. The controls are designed to shut down the unit during any flame outage or circuit failure. The flame sensor reacts quickly to these events. If a shutdown occurs, an error code is issued at the IGC board.
  - Gas pressure switch to avoid operation at low supply pressure (<10 mbar).
- Easy maintenance
  - If the gas valve is closed for safety reasons, diagnostic LEDs will indicate the failure mode (please refer to the IOM).

Electric heater option (50UA/UH only)

- The electric heater is located after the main thermodynamic coil and guarantees constant and comfortable supply air temperature in winter. This option also enhances comfort when the heat pump is operating in the defrost cycle.
- Each 50UH rooftop unit can be fitted with a choice of three electric heater options offering two control stages.
- Shielded electric resistance heaters are fully factory-wired and tested. Each stage is protected against overloads by two thermal protectors. The low-limit protector with automatic reset is located above the resistance heaters while the high-limit protector with manual reset is located in the heater control box. This high-temperature limit control offers overload protection and is set to 90°C. It is located less than 150 mm after electric heaters.

Electric heater

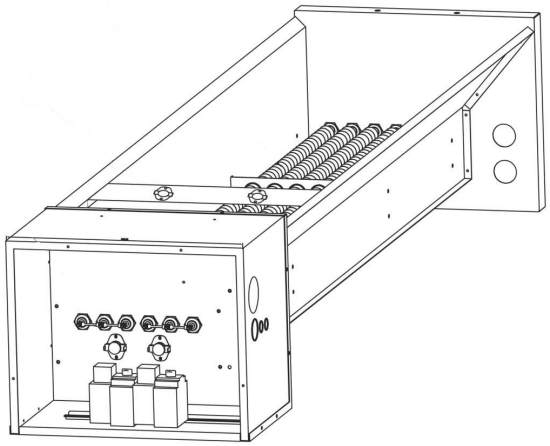

Hot-water coil with three-way valve option (50UA/UH only)

- The hot-water coil is located after the main thermodynamic coil and guarantees constant and comfortable supply air temperature in winter. It allows fully modulated heating capacity, using a three-way valve, protected by a frost protection sensor. This option allows high-capacity heating.
- The hot-water coils offer a fully modulating proportional three-way valve as standard, with supply air temperature-based control. They also include two isolating shut-off valves and are factory-fitted, wired and fully factory-tested. Frost protection is provided by a low-temperature sensor and the coils are equipped with a purge system.

Hot-water coil

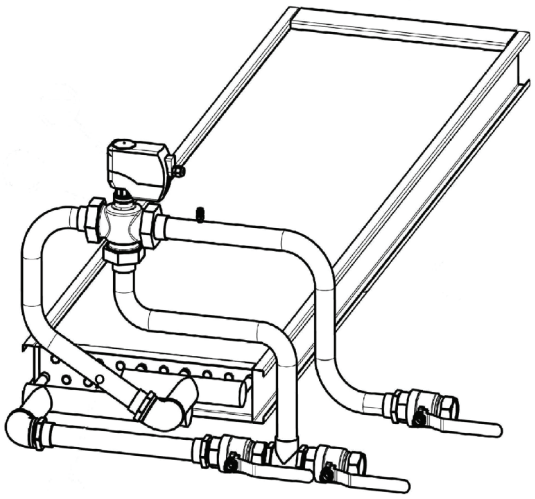

Return air fan option

- Allows additional return air pressure for the return air ductwork, minimising overpressure in the building when fresh air is introduced. Also permits manual or automatic system air pressure balancing in the building.
- This option assists the supply fan to overcome the return-side pressure drop while running in series with the supply fan. It is fitted with a damper to exhaust excessive air due to fresh air usage. The exhaust air damper can be manually or automatically adjusted, based on the fresh air options. The return air fan is shipped loose, but separately functionally tested before leaving the factory.
- The associated supporting frames, ductwork, cables for mechanical and electrical connection needs to be field-supplied. The drive is factory-set in accordance with the return air fan performance tables. When indoor pressure and air flow requirements differ from the nominal ratings, the motor pulley can be adjusted for different available static pressure values.

Return air fan

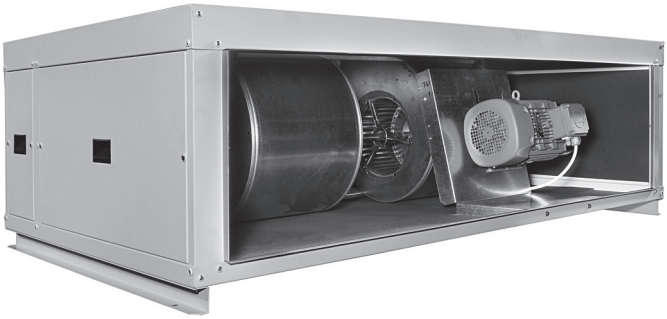

Return air fan

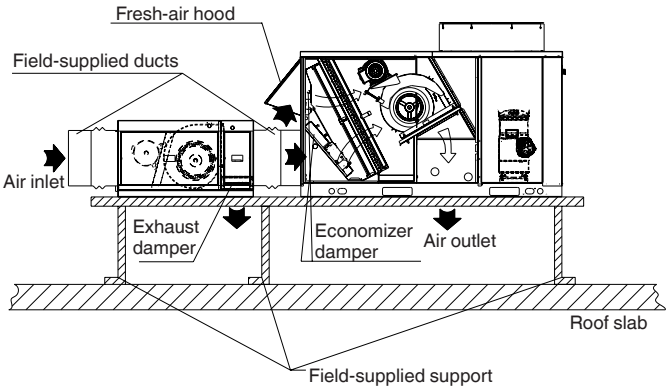

Energy recovery module (ERM)

The ERM is an individual dual-flow unit, equipped with a high-efficiency Eurovent-certified air-to-air heat recovery wheel with 63% to 88% efficiency, an integrated variable-air-volume plug fan and a control system for plug-and-play installation. The modules are specially designed to ensure economical indoor air extraction and to take in fresh air to meet current and future requirements for high-energy-efficiency buildings.

- The unit cabinet is made of galvanised and powder-painted sheet metal, specially suitable for outdoor use, for double corrosion protection (light-grey colour RAL 7035).
- The ERM is fitted with G4 filters on the fresh-air side as standard to protect the heat recovery wheel against dust.
- Insulated duct, power and control wiring between the ERM and the rooftop unit is supplied by the factory with the duct kit (installed by the customer).

■ Energy savings
- The heat exchanger reclaims up to 90% of the heat from the extract air and transfers it to the supply air, considerably reducing the thermal load on the heating and air conditioning equipment.
- High-efficiency plug fans for exhaust air. The direct-drive fans do not suffer any belt and pulley drive losses. They are more energy-efficient and require less maintenance. The exhaust air fan speed is independently controlled by frequency inverters directly connected to the Pro-Dialog+ controller inside the rooftop unit.
- When outside conditions permit, the control system continuously adjusts the fan speed to minimise power consumption.

High-efficiency heat recovery wheel

■ Energy recovery benefits

Quick and easy plug-and-play installation:
- The ERM option is delivered as a single piece for fast installation, separate from the rooftop units. An insulated sheet metal kit and a wiring kit are provided for easy connection between rooftop and ERM unit.
- To facilitate installation, the ERM is factory-fitted with a terminal block for the power and control wiring for easy connection to the rooftop units (wiring to be supplied by the installer). The control box and the sensors are factory-installed and tested for fast and trouble-free start-up.

Control and safety devices
- An integrated motion detector ensures that the ERM control generates an alarm signal if the heat recovery wheel stops.
- The plug fan pressure differential sensor transmits an alarm signal if the fan stops.
- A barometric exhaust air damper prevents air and water infiltration when the exhaust fan is switched off.

Control and safety device

■ Installation, serviceability and fast commissioning
- The 48/50UA-UH unit design facilitates fast field-conversion. Single-point electrical connections are standard on all units. Service access to the electrical components can be through the roof curb or unit side.
- Systematic factory run test before shipment
- Quick-test function for step-by-step verification of instruments, electrical components and motors.
- All units are equipped with the Pro-Dialog+ control system as standard, with information displayed clearly in English, French, German, Italian and Spanish. Pro-Dialog+ navigation uses intuitive tree-structure menus, similar to Internet browsers. They are user-friendly and permit quick access to the principal operating parameters: number of compressors operating, suction/discharge pressure, compressor operating hours, setpoint, air temperature.
- The controls are compatible with either a room sensor or a conventional thermostat with no need to install an accessory interface. No special tools are required to run the unit through its operational steps.
- The unit can be run-tested before an installation is complete to ensure smooth start-up. Hinged access panels offer easy maintenance access to all standard serviceable components. No fasteners need to be removed; this reduces service time and helps prevent roof leaks caused by discarded screws. Colour-coded wiring permits easy tracing and diagnostics.

Roof curbs

Fixed chassis roof curbs are available for both vertical and horizontal air discharge. The unit is easily converted to front return discharge on-site, by simply changing the panels. The 48/50UA-UH units leave the factory with the air discharge and return in the lower unit section. The front discharge roof curb accessory changes the discharge and return to the front section.

Fixed vertical roof curb

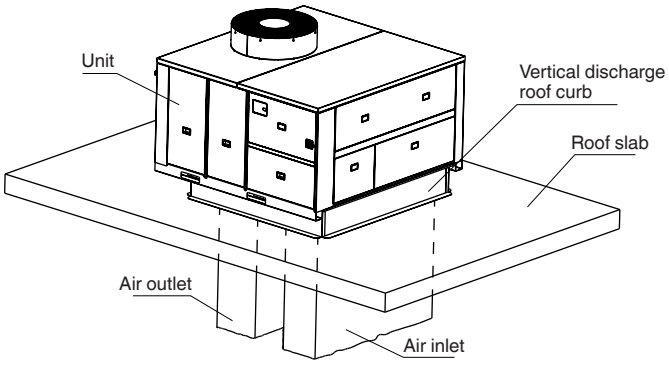

Fixed horizontal roof curb

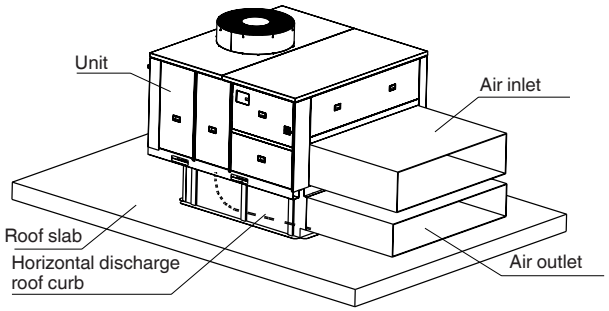

Tilting chassis with longitudinal or transverse slope control up to 5°.

Tilting vertical roof curb

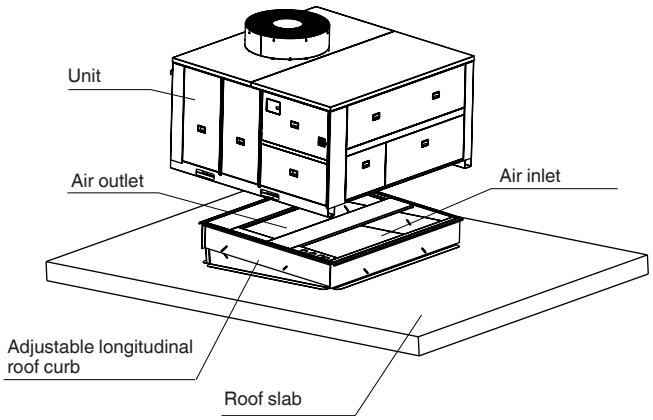

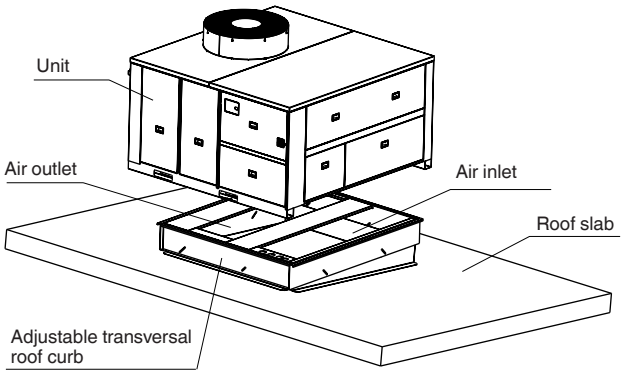

Options

Option	No.	Description	Advantage	Use
Electric heaters				
Electric heater 9 + 9 kW	83	Electric heater coil offers auxiliary heating in cooling only and reversible units for low mixed air temperature (high fresh-air rate in winter).	Electric heater is located after the main thermodynamic coil, guarantees constant and comfortable supply air temperature in winter. This option enhances comfort when the unit operates in the defrost cycle.	50UA-UH 045, 055
Electric heater 18 + 9 kW	84			50UA-UH 045-075
Electric heater 18 + 18 kW	85			All
Electric heater 27 + 27 kW	86			50UA-UH 065-120
Electric heater 36 + 36 kW	87			50UA-UH 085-120
Hot-water coils				
Hot-water coil 60 kW with 3-way valve	37	Hot-water coil offers auxiliary heating in cooling only and reversible units for low mixed air temperature (high fresh-air rate in winter).	Hot-water coil located after the main thermodynamic coil, guarantees constant and comfortable supply air temperature in winter. Allows fully modulated heating capacity, using a three-way valve, protected by a frost protection sensor.This option allows high-capacity heating.	50UA-UH 045-075
Hot-water coil 100 kW with 3-way valve	38			50UA-UH 065, 075
Hot-water coil 130 kW with 3-way valve	39			50UA-UH 085-120
Gas modules				
Natural gas 46.8 kW – 2 stages, 5 cells	90	Gas heater offers auxiliary heating in cooling only and reversible units for low mixed air temperature (high fresh-air rate in winter). Multiple stages for heating capacity control. Available with natural gas or liquified propane gas.	Gas heaters located after the main thermodynamic coil, guarantees constant and comfortable supply air temperature in winter. This option allows high-capacity heating.	48UA/UH 045, 055
Natural gas 61.8 kW – 2 stages, 6 cells	91			48UA/UH 045-075
Natural gas 72.9 kW – 2 stages, 7 cells	92			48UA/UH 065, 075
Natural gas 93.6 kW – 3 stages, 5 + 5 cells	93			48UA/UH 085, 100
Natural gas 125 kW – 3 stages, 6 + 6 cells	94			48UA/UH 085-120
Natural gas 147.4 kW – 3 stages, 7 + 7 cells	95			48UA/UH 120
Propane gas 53.2 kW, 5 cells	100			48UA/UH 045, 055
Propane gas 63.9 kW, 6 cells	101			48UA/UH 045-075
Propane gas 74.5 kW, 7 cells	102			48UA/UH 065, 075
Propane gas 105.2 kW – 2 stages. 5 + 5 cells	103			48UA/UH 085, 100
Propane gas 127.8 kW – 2 stages, 6 + 6 cells	104			48UA/UH 085-120
Propane gas 150.7 kW – 2 stages, 7 + 7 cells	105			48UA/UH 120
Coil protection options				
Outdoor pre-coated/indoor standard	154	Coil fins made of UV- resistant polyurethane-protected pre-treated aluminium.	Improved corrosion resistance for extended coil life.	All
Outdoor pre-coated/indoor pre-coated	153			
Fresh air and economizer outdoor air options				
Fresh-air sliding panel	118	Manual adjustment of permanent fresh-air volume up to 25%. Fresh-air hood also supplied.	Fresh-air supply to the building with constant adjustable rate.	All
Manual outdoor air damper	40	Manual adjustment of permanent fresh-air volume up to 40%. Fresh-air hood also supplied.	Fresh-air supply to the building with constant adjustable rate.	
Economizer, thermostatic control	35	Direct link-driven low-leakage blades to control fresh-air percentage up to 100% vs return air. Indoor and outdoor air temperature sensors supplied. Fresh-air hood also supplied.	Fresh-air supply to the building with variable rate, based on the outside air temperature. Allows free-cooling operation for energy savings, based on temperature differential control.	
Economizer, enthalpy control	36	Direct link-driven low-leakage blades to control fresh-air percentage up to 100% vs return air. Indoor and outdoor air enthalpy sensors supplied. Fresh-air hood also supplied	Fresh-air supply to the building with variable rate, based on the outside air enthalpy (temperature and humidity level). Allows intelligent free-cooling operation for energy savings, based on enthalpy differential control.	
Economizer, thermostatic + CO_2 sensor control	156	Direct link-driven low-leakage blades to control fresh-air percentage up to 100% vs return air. Indoor and outdoor air temperature sensor supplied. Indoor air quality CO_2 sensor supplied. Fresh-air hood also supplied.	Fresh-air supply to the building with variable rate, based on the outside air temperature. Allows free-cooling operation for energy savings, based on temperature differential control. Controls CO_2 concentration levels in the building.	
Economizer, enthalpy + CO_2 sensor control	157	Direct gear-driven low-leakage blades to control fresh-air percentage vs return air. Indoor and outdoor air temperature and humidity sensors supplied. Indoor air quality CO_2 sensor supplied. Fresh-air hood also supplied.	Fresh-air supply to the building with variable rate, based on outside air temperature and humidity level. Allows intelligent free-cooling operation for energy savings, based on enthalpy differential control. Controls CO_2 concentration levels in the building.	
Supply fan options				
High static pressure 1	150	Oversized fan and motor configuration	High external static pressure requirements up to 680 Pa at nominal air flow rate (without options).	All
High static pressure 2	151			
High static pressure 3	152			
Standard with soft starter	165	Gradual supply fan motor starting.	Progressive supply fan starting to reduce noise and start-up current.	
High static pressure 1 with soft starter	166	Oversized fan and motor configuration and gradual supply fan motor starting time.	High external static pressure requirements up to 680 Pa at nominal air flow rate (without options). Progressive supply fan starting to reduce noise and start-up current.	All
High static pressure 2 with soft starter	167			
High static pressure 3 with soft starter	168			

Options (continued)

Option	No.	Description	Advantage	Use
Filter options				
Standard G4 filter (not classified)		G4 filters synthetic media 50 mm cardboard frame, 90% gravimetric efficiency and high filtration area.	High-efficiency filtration for return air and fresh air with low pressure drop. No fire classification.	All
G4 filter M1 fire class	145	G4 filters synthetic media 50 mm metallic frame, 90% gravimetric efficiency and high filtration area.	High-efficiency filtration for return air and fresh air with low pressure drop with fire class M1.	
F7 filter M1 fire class	147	F7 filters synthetic media 50 mm metallic frame, 90% opacimetric efficiency and high filtration area.	High-efficiency filtration for return air and fresh air with low pressure drop with fire class M1.	
G4 + F7 filter M1 fire class	158	Two-stage particle filtration G4 and F7	Two-stage high-efficiency filtration for return air and fresh air with medium pressure drop and fire class M1. Replaceable media G4.	
F6 + F7 filter M1 fire class	159	Two-stage particle filtration F6 and F7	Two-stage extra-high-efficiency filtration for return air and fresh air with medium pressure drop and fire class M1. Replaceable media F6.	
Drain pan options				
Standard		Galvanised steel drain pan with connection to a drain pipe.	Standard easy condensate draining.	All
Stainless steel pan	72	Stainlees steel drain pan with connection to a drain pipe.	Easy-to-clean drain pan for improved hygiene and easy condensate draining.	
Energy recovery options				
Energy recovery module (supplied separately)	160	The ERM is an individual dual-flow unit with a high-efficiency Eurovent-certified air-to-air condensation heat recovery wheel with 63% to 88% efficiency, an integrated variable exhaust air volume plug fan and a control system for a plug-and-play installation and connection to the rooftop control box.	Energy-saving solution when the unit operates with fresh air rate in extreme outdoor temperatures (winter or summer) allowing energy recovery from exhaust air and transfer to fresh-air side. Reduced installed unit cooling or heating capacity. Allows 100% free cooling.	All
Return/exhaust air options				
Barometric exhaust	71	Aluminium blades with gravity-control closing to protect exhaust from rain.	Allows pressure relief when fresh air is introduced to a building with good air tightness.	All
1.1-kW power exhaust, air flow 2200 l/s, 80 Pa	66	Centrifugal exhaust fan for exhaust air, running when the fresh air inlet reaches 50% of the fresh air requirement (factory-fitted to the unit). Fixed air flow. Includes barometric exhaust option 71.	Minimised over-pressure in the building if fresh air is introduced. Allows additional exhaust air pressure for return ductwork medium pressure drop.	48/50UH 045-075
2.9-kW power exhaust, air flow 2800 l/s, 150 Pa	67			48/50UH 085-120
Return fan with manual 2.9-kW exhaust damper, 2800 l/s (shipped loose)	68	Centrifugal return fan to provide high return air pressure. Adjustable air flow rate with variable pulley. Adjustable exhaust damper with low-leakage blades to adjust exhaust air flow rate. Available only with options 40 and 118.	Allows additional return air pressure for return ductwork. Minimised over-pressure in the building if fresh air is introduced. Allows manual system air pressure balancing in the building.	48/50UH 045-075
Return fan with manual 4-kW exhaust damper, 3600 l/s (shipped loose)	69			48/50UH 045-075
Return fan with manual 5.5-kW exhaust damper, 4400 l/s (shipped loose)	70			48/50UH 085-120
Return fan w. motorised 2.9-kW exhaust damper, 2800 l/s (shipped loose)	142	Centrifugal return fan to provide high return air pressure. Adjustable air flow rate with variable pulley. Motorised exhaust damper with low-leakage blades for automatic pressure balancing.	Allows additional return air pressure for return ductwork. Minimised over-pressure in the building if fresh air is introduced. Allows automatic system air pressure balancing in the building.	48/50UH 045-075
Return fan w. motorised 4-kW exhaust damper, 3600 l/s (shipped loose)	143			48/50UH 045-075
Return fan w. motorised 5.5-kW exhaust damper, 4400 l/s (shipped loose)	144			48/50UH 085-120
Temperature sensor options				
Standard space sensor T55		T55 sensor to monitor room temperature.	Supply air temperature control based on room temperature.	All
Space sensor with override and setpoint adjustment T56	19	T56 sensor to monitor room temperature and provide a temperature offset of 3 K maximum.	Room temperature control with override and setpoint adjustment.	
Space sensor with display, override, on/off and setpoint adjustment	24	Room temperature sensor with occupied period extension (up to 4 hours), setpoint adjustment and on/off functions.	Room temperature control with override, setpoint adjustment and display.	
Two-space sensor T55 + T56	57	Twin sensors T55 + T56 supplied		
Two-space sensor T55 + option 24	59	Twin sensors T55 + option 24 supplied		
Duct temperature sensor	18	Duct sensor to monitor return air temperature.	Allows direct temperature control on return air duct.	
Communication options				
CCN/Jbus Gateway	26	Two-direction communications board, complies with JBus communication protocol.	Easy connection by communication bus to a Building Management System.	All
CCN/Lon Gateway	27	Two-direction communications board, complies with LonTalk communication protocol.	Easy connection by communication bus to a Building Management System.	
CCN/BACnet Gateway	161	Two-direction communications board, complies with BACnet communication protocol.	Easy connection by communication bus to a Building Management System.	
Air flow safety devices				
Dirty-filter detection (pressure switch)	96	Alarm reported by adjustable differential pressure switch connected to ProDialog+ controller.	Easy filter maintenance by checking the filter pollution level, improving energy efficiency	All
Supply air flow detection (pressure switch)	99	Alarm reported by adjustable differential pressure switch connected to ProDialog+ controller.	Fan checking is "On".	
Dirty-filter alarm and air flow detection	162	Combination of options 96 and 99.	Filter pollution level and fan checking is "On".	

Options (continued)

Option	No.	Description	Advantage	Use
Smoke detection				
Smoke detector	97	Generates general unit fault when the smoke is detected, economizer return air damper is closed, supply fan is stopped, electric heaters/hot-water coils/gas heaters are switched off. Only available with economizer options.	Building fire safety based on smoke detection.	All
Smoke detector + DAD (French ERP regulation)	110	Generates general unit fault when the smoke is detected, economizer return air damper is closed, supply fan is stopped, electric heaters/hot-water coils/gas heaters are switched off. Additional DAD functions. Only available with economizer options.	Building fire safety based on smoke detection DAD safety device.	
Fire thermostat	121	Generates general unit fault if thermostats detect return air temperature above adjustable tempera-ture (factory-set to 70°C). Manually reset thermostat in return air duct.	Building fire safety based on temperature rise detection.	
Duct connection				
Fixing frame	163	Rigid metallic frame on air return and supply sides.	Easy air duct installation.	All
Packaging				
Standard (plastic wrap)				All
Pallet + coil protection + plastic wrap	128	Packaging with pallet, coil protection + plastic wrap.	Unit protection for transport	
70% open crate + coil protection + plastic wrap	127	Packaging with 70% open crate + coil protection + plastic wrap.	Unit protection for long-distance transport	

Accessories

Accessory	Part No.	Description	Advantage	Use
Roof curbs				
Vertical supply roof curb	57070020010	Galvanised steel 2 mm thick frame for vertical supply and vertical return air.	Provides easy and cost-effective weather-proof sealed rooftop installation and easy connection to the air duct.	48/50UH 045-075
	57070021501			48/50UH 085-120
Vertical supply adjustable longitudinal roof curb	57070025510	Galvanised steel 2 mm thick frame for vertical supply and vertical return air. Adjustable longitudinal slope up to 5%.	Provides easy and cost-effective weather-proof sealed rooftop installation and easy connection to the air duct. Compatible with all roof profiles.	48/50UH 045-075
	57070027101			48/50UH 085-120
Vertical supply adjustable transversal roof curb	57070026310	Galvanised steel 2 mm thick frame for vertical supply and vertical return air. Adjustable transversal slope up to 5%.		48/50UH 045-075
	57070027901			48/50UH 085-120
Horizontal supply roof curb	57070022710	Galvanised steel 2 mm thick frame for horizontal supply and horizontal return air.	Provides easy and cost-effective weather-proof sealed rooftop installation and easy connection to the horizontal supply air duct.	48/50UH 045-075
	57070025210			48/50UH 085-120
Transition roof curb (French ERP)	57070034310	Thin galvanised steel frame for gas heater unit in France only. Standard or adjustable roof curb also required.	Meets French regulation requirements for gas heaters.	48/50UH 045-075
	57070035410			48/50UH 085-120
Remote control				
Remote HMI Pro-Dialog+	57260042910	Remote user interface installation.	Remote control of several units up to 300 m.	All

Physical data, 48/50UA units

48/50UA		045	055	065	075	085	100	120
Eurovent performances								
Nominal cooling capacity*	kW	44.1	50.9	61.1	71.5	88.9	102.5	114.5
Nominal power input, cooling	kW	14.4	17.9	21.2	27.0	28.7	34.2	40.3
EER	kW/kW	3.06	2.85	2.88	2.65	3.10	3.01	2.84
Eurovent energy class, cooling		A	B	B	C	A	A	B
Control		Pro-Dialog+						
Operating weight without option								
48UA weight	kg	750	890	960	970	1420	1510	1600
50UA weight	kg	815	955	1033	1043	1555	1645	1765
Refrigeration system								
Compressor type		Hermetic scroll						
Refrigerant		R-410A						
No. of circuits/No. of compressors		1/1	1/2	2/2	2/2	2/2	2/3	2/4
Charge, circuits A/B	kg	13/-	13/-	10/11	10/11	13/14	17.5/14	17.5/19
Oil charge, circuits A/B (POE 160SZ)	kg	3.6/-	6.6/-	3.3/3.3	3.3/3.3	3.3/3.6	6.6/3.6	6.6/6.6
Indoor coil								
Material		Cu/Al						
Coil type	in	3/8 RTPF						
No. of rows/fin spacing	mm	3/1.81	3/1.81	4/1.81	4/1.81	4/1.7	4/1.7	4/1.6
Condensate drain connection size	mm	23	23	23	23	23	23	23
Outdoor coil								
Material		Cu/Al						
Coil type	in	3/8 RTPF						
No. of rows/fin spacing	mm	3/1.7	3/1.7	3/1.7	3/1.7	4/1.7	4/1.7	4/1.7
Outdoor fan/motor								
Type		Axial Flying Bird 4 fans with rotating shroud						
Motor drive type		Direct						
Quantity		1	2	2	2	2	2	2
Motor power input	kW	1.72	0.84	1.83	2.03	1.87	1.76	1.76
Fan speed high/low	r/s	16.3/8.1	12.0/6.0	16.3/8.1	16.2/8.1	16.2/8.1	16.2/8.1	16.2/8.1
Total air flow	l/s	5400	6700	10100	10100	10300	10600	10600
	m^3/h	19400	24100	36400	36400	37100	38200	39200
Fan diameter	mm	775	775	775	775	775	775	775
Sound power level 10^{-12} W**	dB(A)	86.5	84.4	90.6	90.6	90.7	91.0	91.3
Electric heaters (50UA only)								
Type		Option 84	Option 85	Option 85	Option 85	Option 86	Option 86	Option 86
Heating capacity	kW	27	36	36	36	54	54	54
Capacity steps		18 - 9	18 - 18	18 - 18	18 - 18	27 - 54	27 - 54	27 - 54
Rated current	A	39	52	52	52	78	78	78
Gas heaters (48UA only)								
Natural gas heating type		Option 91	Option 91	Option 92	Option 92	Option 94	Option 94	Option 95
Number of cells/injector		6	6	7	7	12	12	14
Net heat input (min./max.)	kW	49/70	49/70	57/81	57/81	49/139	49/139	57/162
Heat output (min./max.)	kW	42/62	42/62	50/73	50/73	43/125	43/125	51/147
Steady state efficiency	%	90%	90%	90%	90%	90%	90%	90%
Natural gas (G20) rate***	l/s	5.14/7.34	5.14/7.35	6.00/8.57	6.00/8.57	5.14/14.7	5.14/14.7	6.00/17.14
Natural gas (G25) rate***	l/s	5.98/8.54	5.98/8.55	6.98/9.97	6.98/9.97	5.98/17.08	5.98/17.08	6.97/19.94
Natural gas (G25.1) rate***	l/s	5.97/8.53	5.97/8.54	5.97/9.96	5.97/9.96	5.97/17.07	5.97/17.07	6.96/19.93
Number of stages		2	2	2	2	3	3	3
Propane gas heating type		Option 101	Option 101	Option 102	Option 102	Option 104	Option 104	Option 105
Number of cells/injector		6	6	7	7	12	12	12
Net heat input (min./max.)	kW	--/71	--/71	--/83	--/83	71/142	71/142	83/166
Heat output (min./max.)	kW	--/64	--/64	--/75	--/75	64/128	64/128	75/151
Steady state efficiency	%	90%	90%	90%	90%	90%	90%	90%
Propane gas (G31) rate***	kg/h	--/5.51	--/5.51	--/6.43	--/6.43	5.51/11.03	5.51/11.03	6.43/12.86
Number of stages		1	1	1	1	2	2	2
Weight****	kg	73	73	80	80	150	150	165
Power input (400 V-3 ph-50 Hz)	kW	0.22	0.22	0.22	0.22	0.44	0.44	0.44
Gas connection pipe size	in	Rp 3/4 F	Rp 3/4 F	Rp 3/4 F	Rp 3/4 F	Rp 3/4 F	Rp 3/4 F	Rp 3/4 F

* Nominal Eurovent conditions: outdoor air dry bulb temperature of 35°C, indoor air wet bulb emperature of 19°C.
** In accordance with ISO 961461 and certified by Eurovent. The values have been rounded and are for information only.
*** Natural gas G20 net calorific value 34.02 MJ/m^3 at 15°C. 1013.25 mbar.
Natural gas G25 net calorific value 29.25 MJ/m^3 at 15°C. 1013.25 mbar.
Natural gas G25.1 net calorific value 29.3 MJ/m^3 at 15°C. 1013.25 mbar.
Propane gas G31 net calorific value 46.34 MJ/kg at 15°C. 1013.25 mbar.
Propane gas G31 net calorific value 88.0 MJ/m^3 at 15°C. 1013.25 mbar.
**** Weight and power input values are valid for the heating modules.

Physical data, 48/50UH units

48/50UH		045	055	065	075	085	100	120
Eurovent performances								
Nominal cooling capacity*	kW	43.5	50.1	59.1	69.1	84.5	96.7	108.8
Nominal power input, cooling	kW	14.4	17.7	20.7	26.5	27.5	33.8	38.7
EER	kW/kW	3.03	2.83	2.86	2.61	3.07	2.86	2.81
Eurovent energy class, cooling		A	B	B	C	A	B	B
Nominal heating capacity**	kW	43.5	54.4	62.0	74.5	85.1	98.7	120.7
Nominal power input, heating	kW	13.2	16.0	20.1	24.8	24.4	30.7	37.5
COP	kW/kW	3.30	3.41	3.09	3.01	3.49	3.21	3.22
Eurovent energy class, heating		B	A	C	C	A	B	B
Operating weight without option								
48UH weight	kg	755	900	970	980	1430	1520	1610
50UH weight	kg	820	965	1043	1053	1565	1655	1775
Control		Pro-Dialog+						
Refrigeration system								
Compressor type		Hermetic scroll						
Refrigerant		R-410A						
No. of circuits/No. of compressors		1/1	1/2	2/2	2/2	2/2	2/3	2/4
Charge, circuits A/B	kg	14/-	14/-	9/10	8.7/9.7	12/13	14.7/13	15/15.5
Oil charge, circuits A/B (POE 160SZ)	kg	3.6/-	6.6/-	3.3/3.3	3.3/3.3	3.3/3.6	6.6/3.6	6.6/6.6
Indoor coil								
Material		Cu/Al						
Coil type	in	3/8 RTPF						
No. of rows/fin spacing	mm	3/1.81	3/1.81	4/1.81	4/1.81	4/1.7	4/1.7	4/1.6
Condensate drain connection size	mm	23	23	23	23	23	23	23
Outdoor coil								
Material		Cu/Al						
Coil type	in	3/8 RTPF						
No. of rows/fin spacing	mm	3/1.7	3/1.7	3/1.7	3/1.7	4/1.7	4/1.7	4/1.7
Outdoor fan/motor								
Type		Axial Flying Bird 4 fans with rotating shroud						
Motor drive type		Direct						
Quantity		1	2	2	2	2	2	2
Motor power input	kW	1.72	0.84	1.83	2.03	1.87	1.76	1.76
Fan speed high/low	r/s	16.3/8.1	12.0/6.0	16.3/8.1	16.2/8.1	16.2/8.1	16.2/8.1	16.2/8.1
Total air flow	l/s	5400	6700	10100	10100	10300	10600	10600
	m^3/h	19400	24100	36400	36400	37100	38200	39200
Fan diameter	mm	775	775	775	775	775	775	775
Sound power level 10^{-12} W* **	dB(A)	86.5	84.4	90.6	90.6	90.7	91.0	91.3
Electric heaters (50UH only)								
Type		Option 84	Option 85	Option 85	Option 85	Option 86	Option 86	Option 86
Heating capacity	kW	27	36	36	36	54	54	54
Capacity steps		18 - 9	18 - 18	18 - 18	18 - 18	27 - 54	27 - 54	27 - 54
Rated current	A	39	52	52	52	78	78	78
Gas heaters (48UH only)								
Natural gas heating type		Option 91	Option 91	Option 92	Option 92	Option 94	Option 94	Option 95
Number of cells/injector		6	6	7	7	12	12	14
Net heat input (min./max.)	kW	49/70	49/70	57/81	57/81	49/139	49/139	57/162
Heat output (min./max.)	kW	42/62	42/62	50/73	50/73	43/125	43/125	51/147
Steady state efficiency	%	90%	90%	90%	90%	90%	90%	90%
Natural gas (G20) rate****	l/s	5.14/7.34	5.14/7.35	6.00/8.57	6.00/8.57	5.14/14.7	5.14/14.7	6.00/17.14
Natural gas (G25) rate****	l/s	5.98/8.54	5.98/8.55	6.98/9.97	6.98/9.97	5.98/17.08	5.98/17.08	6.97/19.94
Natural gas (G25.1) rate****	l/s	5.97/8.53	5.97/8.54	5.97/9.96	5.97/9.96	5.97/17.07	5.97/17.07	6.96/19.93
Number of stages		2	2	2	2	3	3	3
Propane gas heating type		Option 101	Option 101	Option 102	Option 102	Option 104	Option 104	Option 105
Number of cells/injector		6	6	7	7	12	12	12
Net heat input (min./max.)	kW	--/71	--/71	--/83	--/83	71/142	71/142	83/166
Heat output (min./max.)	kW	--/64	--/64	--/75	--/75	64/128	64/128	75/151
Steady state efficiency	%	90%	90%	90%	90%	90%	90%	90%
Propane gas (G31) rate****	kg/h	--/5.51	--/5.51	--/6.43	--/6.43	5.51/11.03	5.51/11.03	6.43/12.86
Number of stages		1	1	1	1	2	2	2
Weight†	kg	73	73	80	80	150	150	165
Power input (400 V-3 ph-50 Hz)	kW	0.22	0.22	0.22	0.22	0.44	0.44	0.44
Gas connection pipe size	in	Rp 3/4 F	Rp 3/4 F	Rp 3/4 F	Rp 3/4 F	Rp 3/4 F	Rp 3/4 F	Rp 3/4 F

* Nominal Eurovent conditions: outdoor air dry bulb temperature of 35°C. indoor air wet bulb emperature of 19°C.
** Nominal Eurovent conditions: outdoor air wet bulb temperature of 6°C. indoor air dry bulb temperature of 20°C.
*** In accordance with ISO 961461 and certified by Eurovent. The values have been rounded and are for information only.
**** Natural gas G20 net calorific value 34.02 MJ/m^3 at 15°C. 1013.25 mbar.
Natural gas G25 net calorific value 29.25 MJ/m^3 at 15°C. 1013.25 mbar.
Natural gas G25.1 net calorific value 29.3 MJ/m^3 at 15°C. 1013.25 mbar.
Propane gas G31 net calorific value 46.34 MJ/kg at 15°C. 1013.25 mbar.
Propane gas G31 net calorific value 88.0 MJ/m^3 at 15°C. 1013.25 mbar.
† Weight and power input values are valid for the heating modules.

Physical data, 48/50UA-UH units

48/50UA-UH		045	055	065	075	085	100	120
Indoor fan and motor								
Standard static pressure								
No. of motors		1	1	1	1	1	1	1
Drive type		Variable pulley - belt						
No. of fans		1	1	1	1	1	1	1
Type		Centrifugal						
Fan diameter	m	7.7	7.7	7.7	7.7	11.6	11.6	11.6
Nominal air flow	l/s	2528	3444	3472	3944	5550	5550	5550
	m^3/h	9100	12400	12500	14200	20000	20000	20000
Fan speed range (min./max.)	r/s	13.7/16.1	17.1/19.4	18.1/20.6	18.1/20.6	12.8/14.6	12.8/14.6	12.8/14.6
Motor power input	kW	1.6	2.9	4.0	4.0	5.5	5.5	5.5
Available static pressure*	Pa	150	140	225	120	225	225	225
Nominal external static pressure*	Pa	225	241	252	254	211	220	241
High static pressure 1								
No. of motors		1	1	1	1	1	1	1
Drive type		Variable pulley - belt						
No. of fans		1	1	1	1	1	1	1
Type		Centrifugal						
Fan diameter	m	7.7	9.7	9.7	9.7	11.6	11.6	11.6
Nominal air flow	l/s	2528	3444	3472	3944	5550	5550	5550
	m^3/h	9100	12400	12500	14200	20000	20000	20000
Fan speed range (min./max.)	r/s	17.0/19.9	17.3/19.4	17.3/19.4	17.2/19.5	14.5/16.2	14.5/16.2	14.5/16.2
Motor power input	kW	2.2	4.0	4.0	4.0	5.5	5.5	5.5
Available static pressure*	Pa	275	350	380	300	350	350	350
Maximum external static pressure*	Pa	350	450	460	420	455	455	455
High static pressure 2								
No. of motors		1	1	1	1	2	2	2
Drive type		Variable pulley - belt						
No. of fans		1	1	1	1	2	2	2
Type		Centrifugal						
Fan diameter	m	7.7	9.7	9.7	9.7	11.6	11.6	11.6
Nominal air flow	l/s	2528	3444	3472	3944	5550	5550	5550
	m^3/h	9100	12400	12500	14200	20000	20000	20000
Fan speed range (min./max.)	r/s	19.1/21.8	18.1/20.6	18.1/20.6	18.1/20.6	13.8/16.2	13.8/16.2	13.8/16.2
Motor power input	kW	2.9	4.0	4.0	5.5	2.9	2.9	2.9
Available static pressure*	Pa	350	390	420	340	360	360	360
Maximum external static pressure*	Pa	475	540	540	460	535	535	535
High static pressure 3								
No. of motors		1	1	1	1	2	2	2
Drive type		Variable pulley - belt						
No. of fans		1	1	1	1	2	2	2
Type		Centrifugal						
Fan diameter	m	7.7	9.7	9.7	9.7	11.6	11.6	11.6
Nominal air flow	l/s	2528	3444	3472	3944	5550	5550	5550
	m^3/h	9100	12400	12500	14200	20000	20000	20000
Fan speed range (min./max.)	r/s	20.7/24.2	20.5/23.0	20.5/23.0	19.3/21.9	15.4/17.5	15.4/17.5	15.4/17.5
Motor power input	kW	4.0	5.5	5.5	5.5	4.0	4.0	4.0
Available static pressure*	Pa	435	560	580	420	500	500	500
Maximum external static pressure*	Pa	585	680	700	580	675	675	675
Filters								
Quantity		6	6	6	6	9	9	9
Filter size	mm	595 x 495 x 50	595 x 495 x 50	595 x 495 x 50	595 x 495 x 50	595 x 495 x 50	595 x 495 x 50	595 x 495 x 50
Dimensions								
Length	mm	2125	2125	2125	2125	3581	3581	3581
Width	mm	2193	2193	2193	2193	2196	2196	2196
Height	mm	1413	1442	1796	1796	1825	1825	1825

* For standard units at nominal air flow without options.

Electrical data, 48/50UA units

48/50UA*		045	055	065	075	085	100	120
Power circuit								
Nominal power supply	V-ph-Hz	400-3-50						
Voltage range	V	360-440						
Control circuit supply		24 V, via internal transformer						
Maximum start-up current**	A	206	173	183	204	246	261	226
Unit power factor at maximum capacity***		0.82	0.81	0.81	0.84	0.84	0.83	0.83
Maximum unit power input***	kW	21.68	27.41	33.52	40.50	44.58	52.98	59.38
Nominal unit current draw****	A	28.73	36.76	43.00	52.12	55.97	66.55	77.79
Maximum unit current draw†	A	38.20	49.10	60.10	69.80	77.00	92.20	103.10
Customer-side unit power reserve		Customer reserve at the 24 V control power circuit						

Electrical data, 48/50UH units

48/50UH*		045	055	065	075	085	100	120
Power circuit								
Nominal power supply	V-ph-Hz	400-3-50						
Voltage range	V	360-440						
Control circuit supply		24 V, via internal transformer						
Maximum start-up current**	A	206	173	183	204	246	261	226
Unit power factor at maximum capacity***		0.82	0.81	0.81	0.84	0.84	0.83	0.83
Maximum unit power input***	kW	21.68	27.41	33.52	40.50	44.58	52.98	59.38
Nominal unit current draw****	A	25.27	31.55	36.82	45.67	47.30	58.80	77.11
Maximum unit current draw†	A	38.20	49.10	60.10	69.80	77.00	92.20	103.10
Customer-side unit power reserve	kW	Customer reserve at the 24 V control power circuit						

* Standard unit without options and accessories.
** Maximum instantaneous start-up current at operating limit values (maximum operating current of the smallest compressor(s) + fan current + locked rotor current of the largest compressor).
*** Power input, compressors and fans, at their operating limits and nominal voltage of 400 V (data given on the unit nameplate).
**** Standardised Eurovent conditions: indoor air wet bulb 19°C, outside air temperature 35°C with standard fan performance.
† Maximum unit operating current at maximum unit power input and 400 V (values given on the unit nameplate).

Electrical data notes and operating conditions

- 48/50UA-UH units have a single power connection point located at the main switch.
- **The control box includes the following standard features:**
  - a main disconnect switch,
  - starter and motor protection devices for each compressor, fans and electric heater option,
  - the control devices.
- **Field connections:**
  - All connections to the system and the electrical installations must be in full accordance with all applicable local codes.
  - The Carrier 48/50UA-UH units are designed and built to ensure conformance with these codes.
    The recommendations of European standard EN 60204-1 (machine safety - electrical machine components. part 1: general regulations - corresponds to IEC 6020461) are specifically taken into account, when designing the electrical equipment.

Notes:
- Generally the recommendations of IEC 60364 are accepted as compliance with the requirements of the installation directives. Conformance with EN 60204 is the best means of ensuring compliance with the Machines Directive §1.5.1.
- Annex B of EN 60204-1 describes the electrical characteristics used for the operation of the machines.

1. The operating environment is specified below:

a) Environment* - Environment as classified in EN 60721 (corresponds to IEC 60721):
   - outdoor installation (IP24),
   - ambient temperature range: -10°C to +46°C,
   - altitude: ≤ 2000 m,

b) Competence of personnel. class BA4 (trained personnel - IEC 60364)

2. Power supply frequency variation: ± 2 Hz.
3. The neutral (N) conductor must not be connected directly to the unit (if necessary use a transformer).
4. Overcurrent protection of the power supply conductors is not provided with the unit.
5. The factory-installed disconnect switch(es)/circuit breaker(s) is(are) of a type suitable for power interruption in accordance with EN 60947.
6. The units are designed for connection to TN networks (IEC 60364). For IT networks the earth connection must not be at the network earth. Provide a local earth, consult competent local organisations to complete the electrical installation.

CAUTION:
If particular aspects of an actual installation do not conform to the conditions described above, or if there are other conditions which should be considered, always contact your local Carrier representative.

* The required protection level for this class is IP43BW (according to reference document IEC 60529). All 48/50UA-UH units are protected to IP44CW and fulfil this protection condition.

Dimensions, mm

50UA-UH 045

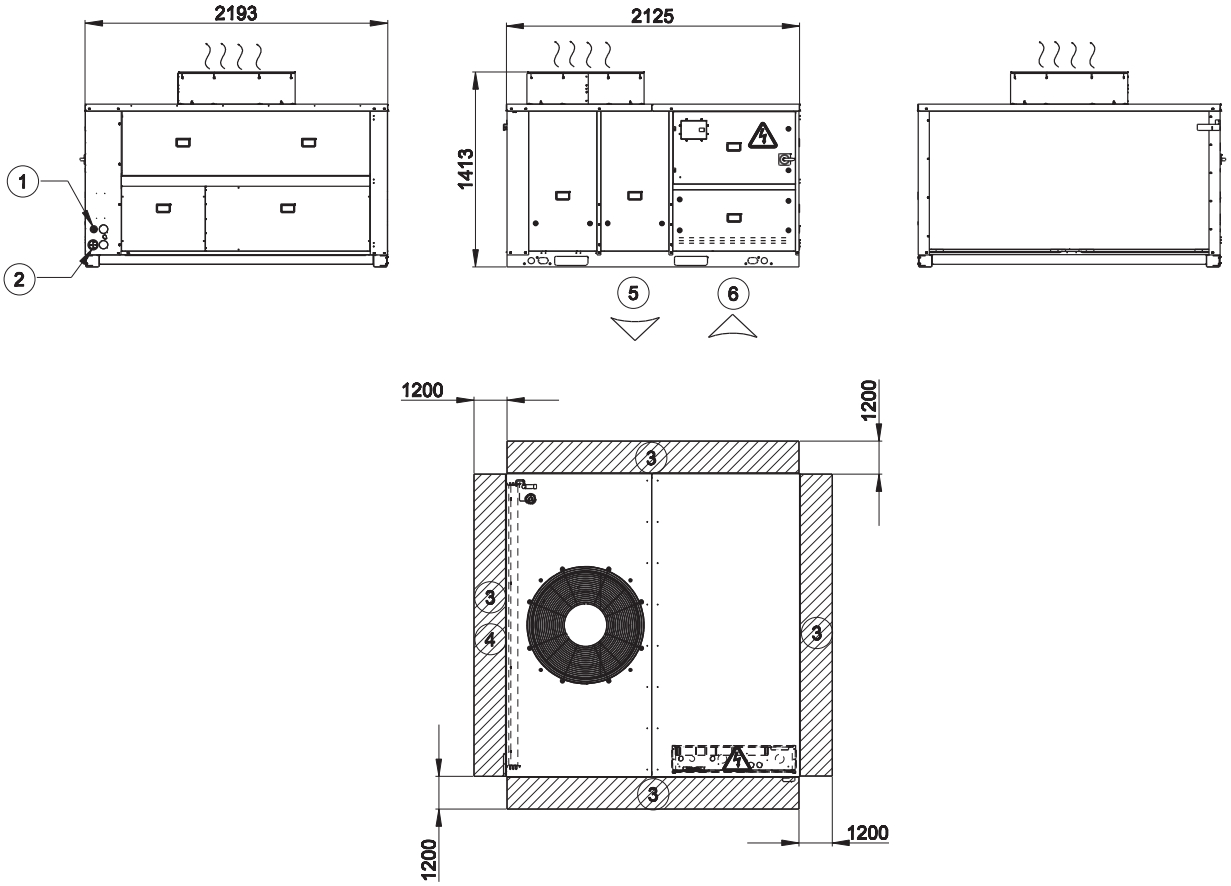

50UA-UH 055

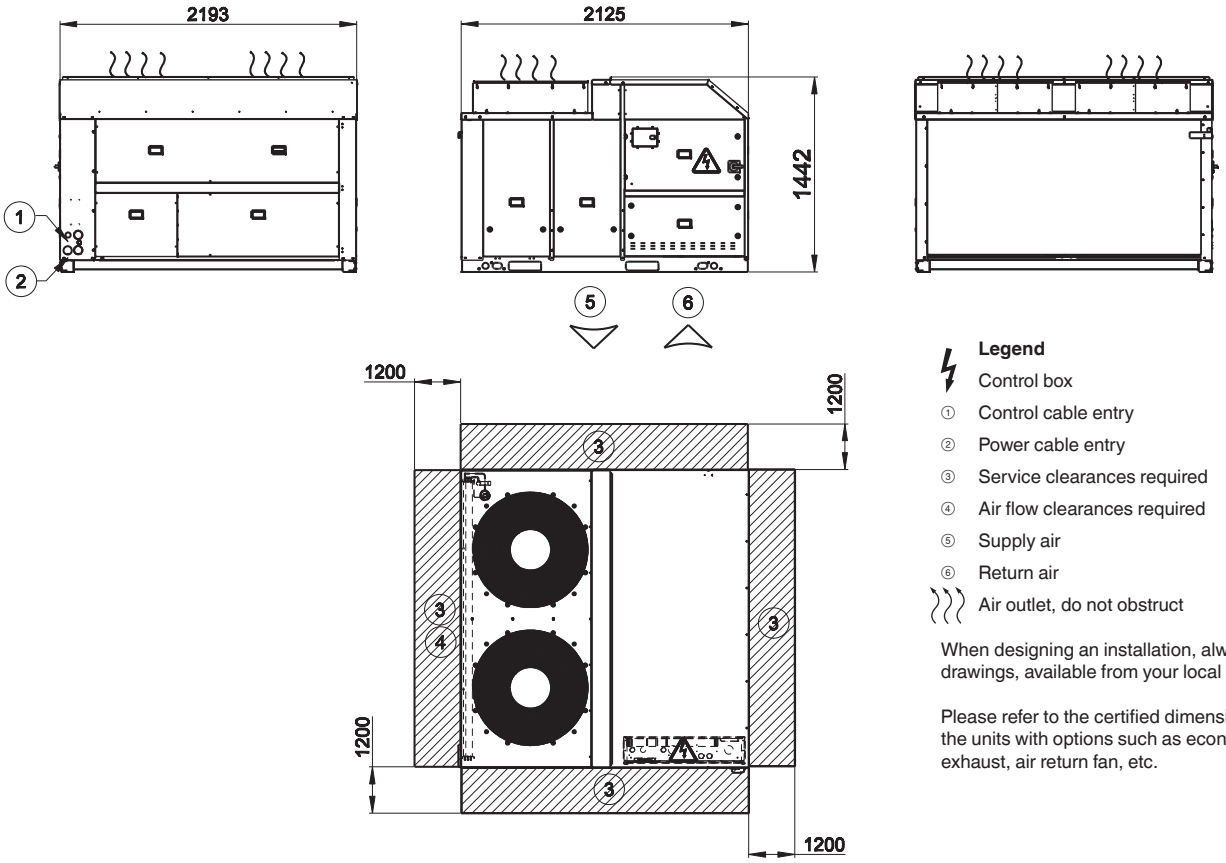

Legend

- Control box
- ① Control cable entry
- ② Power cable entry
- ③ Service clearances required
- ④ Air flow clearances required
- ⑤ Supply air
- ⑥ Return air
- Air outlet, do not obstruct

When designing an installation, always use up-to-date drawings, available from your local Carrier office.

Please refer to the certified dimensional drawings for the units with options such as economizer, power exhaust, air return fan, etc.

Dimensions, mm (continued)

50UA-UH 065, 075

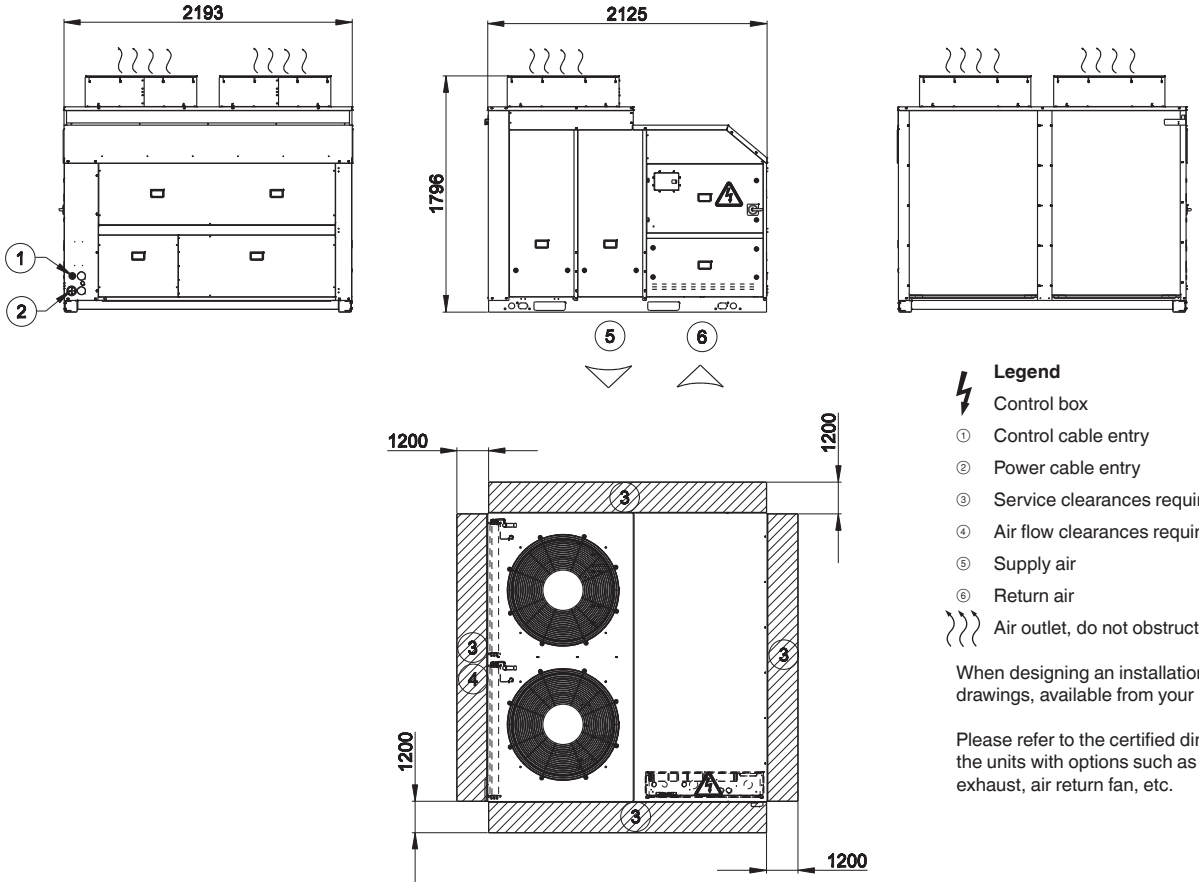

Legend

- Control box
- ① Control cable entry
- ② Power cable entry
- ③ Service clearances required
- ④ Air flow clearances required
- ⑤ Supply air
- ⑥ Return air
- Air outlet, do not obstruct

When designing an installation, always use up-to-date drawings, available from your local Carrier office.

Please refer to the certified dimensional drawings for the units with options such as economizer, power exhaust, air return fan, etc.

50UA-UH 085

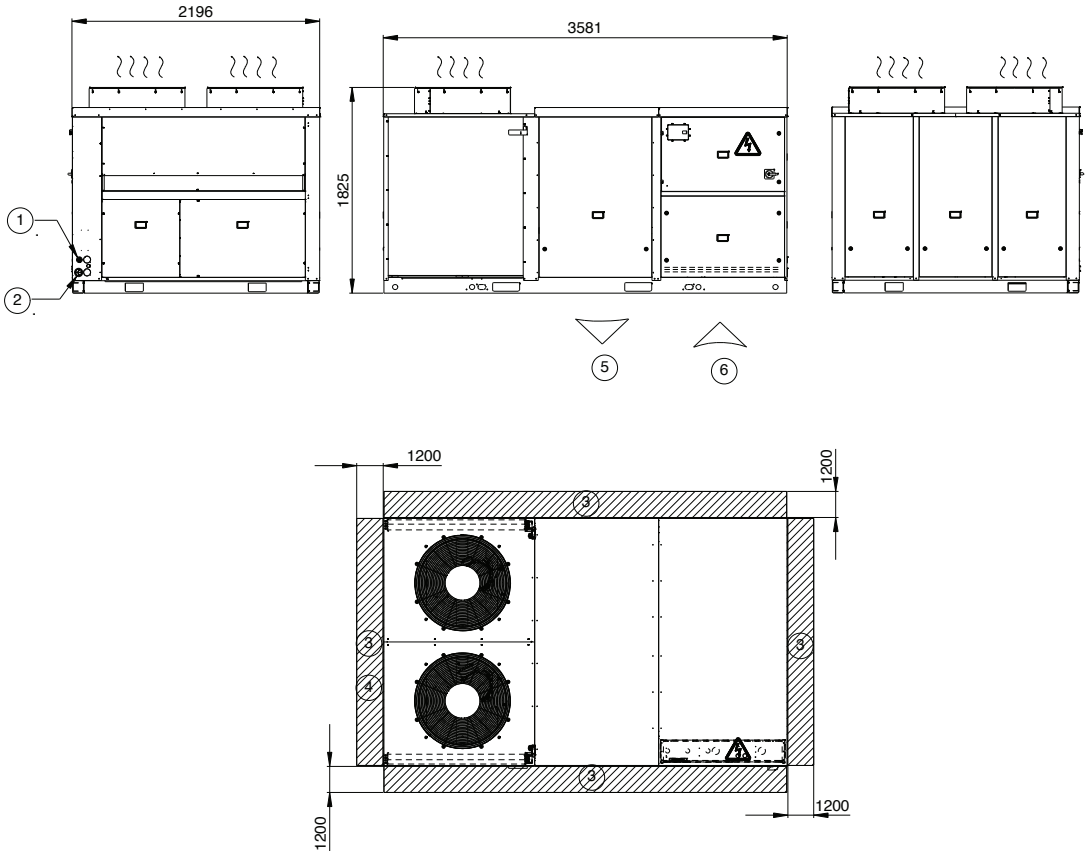

Dimensions, mm (continued)

50UA-UH 100

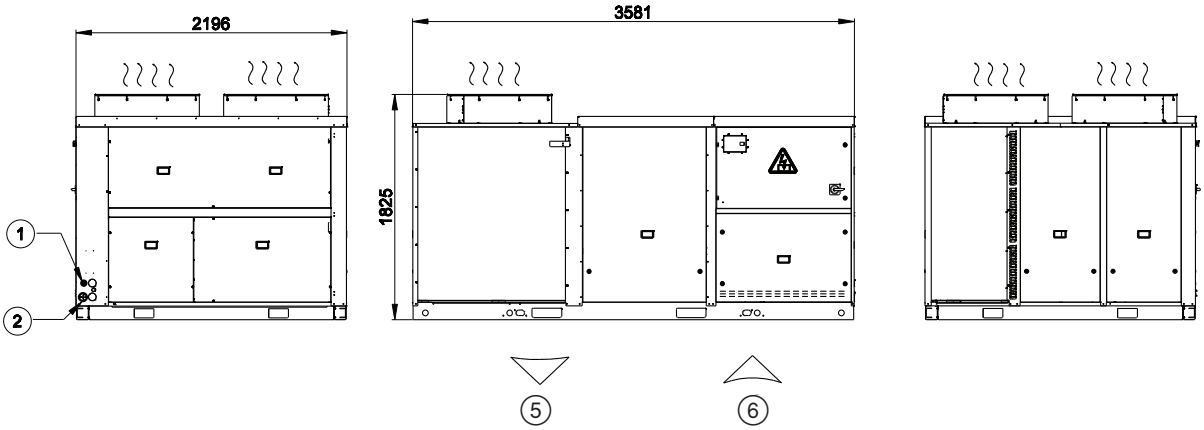

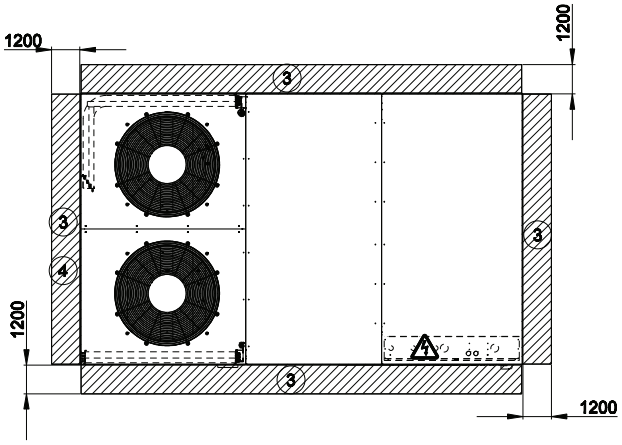

50UA-UH 120

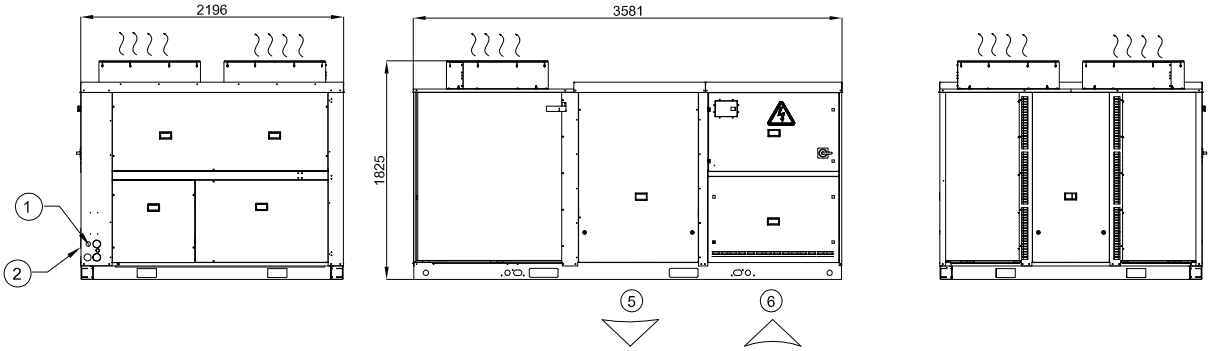

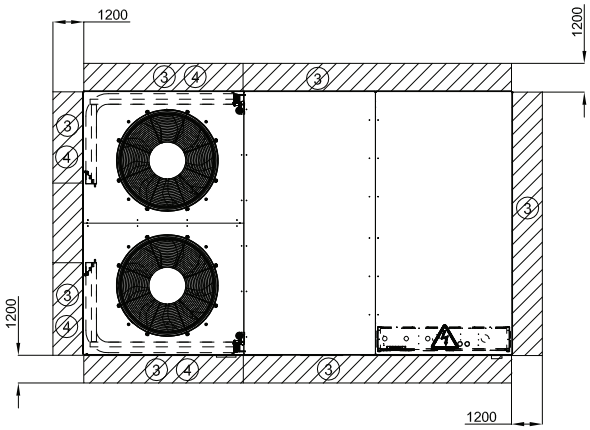

Legend

- Control box
- ① Control cable entry
- ② Power cable entry
- ③ Service clearances required
- ④ Air flow clearances required
- ⑤ Supply air
- ⑥ Return air
- Air outlet, do not obstruct

When designing an installation, always use up-to-date drawings, available from your local Carrier office.

Please refer to the certified dimensional drawings for the units with options such as economizer, power exhaust, air return fan, etc.

Dimensions, mm (continued)

48UA-UH 045

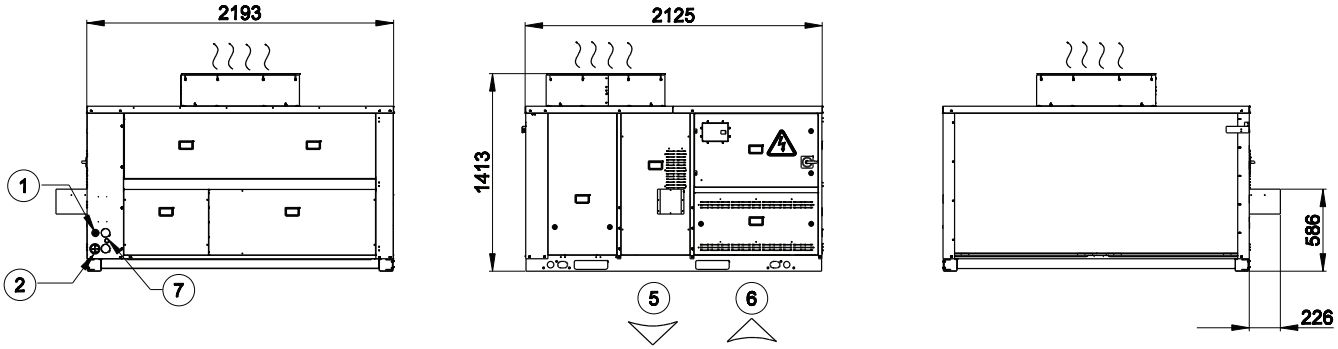

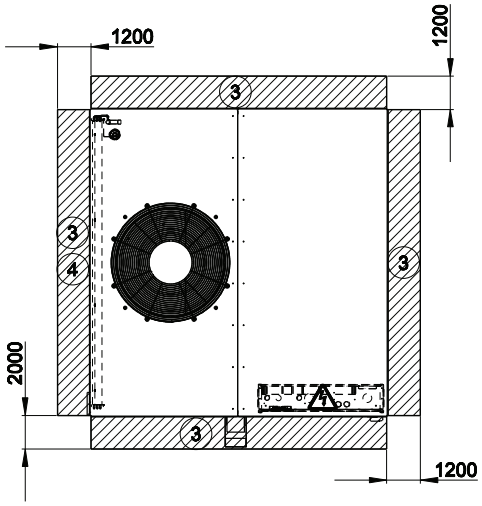

48UA-UH 055

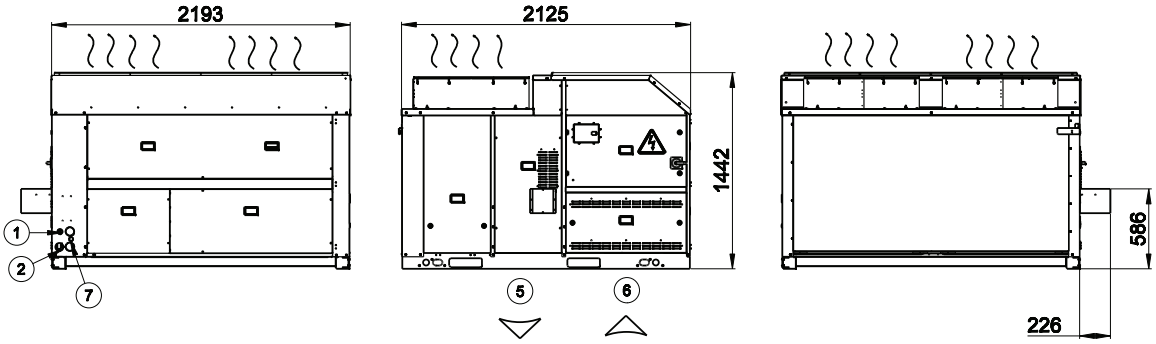

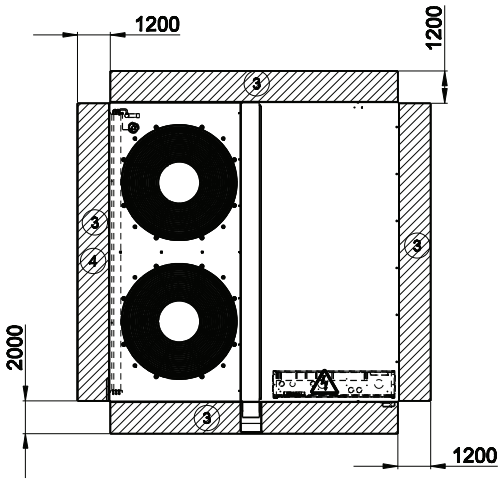

Legend

- Control box
- ① Control cable entry
- ② Power cable entry
- ③ Service clearances required
- ④ Air flow clearances required
- ⑤ Supply air
- ⑥ Return air
- ⑦ Gas inlet opening
- Air outlet, do not obstruct

When designing an installation, always use up-to-date drawings, available from your local Carrier office.

Please refer to the certified dimensional drawings for the units with options such as economizer, power exhaust, air return fan, etc.

Dimensions, mm (continued)

48UA-UH 065, 075

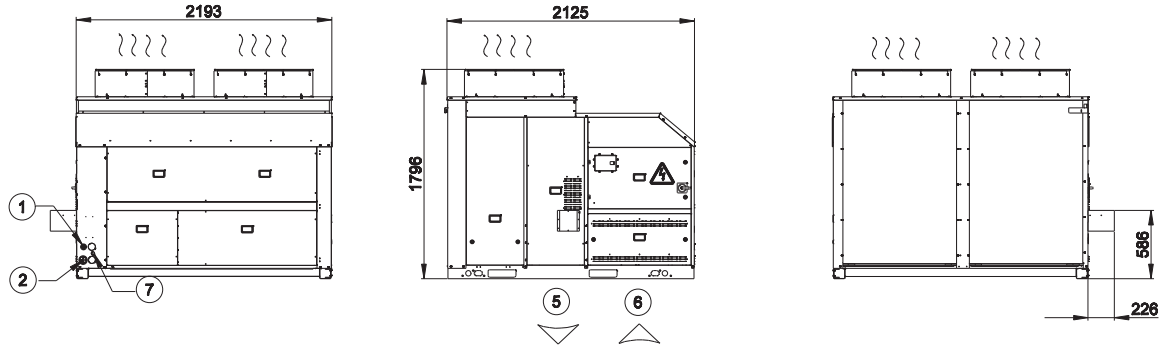

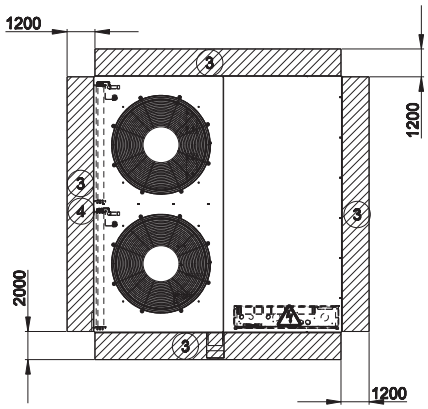

48UA-UH 085

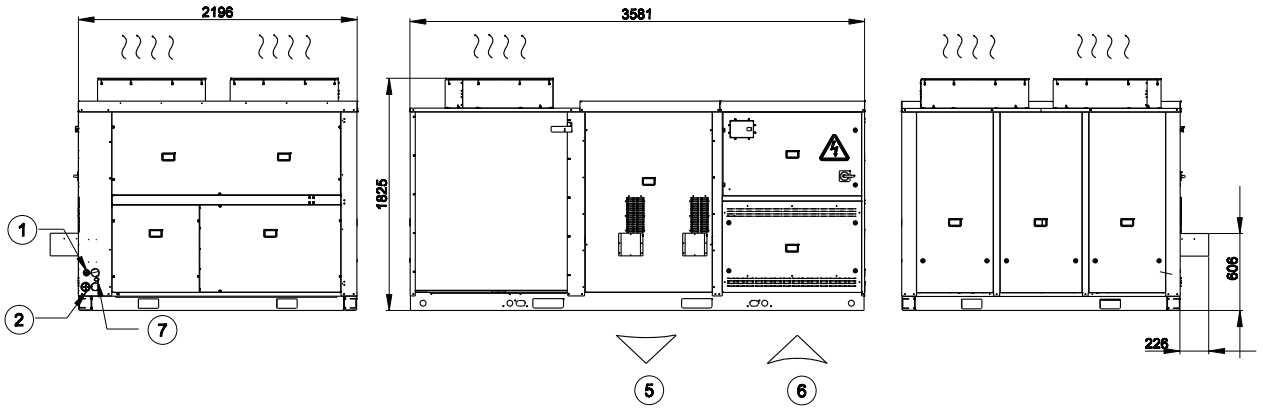

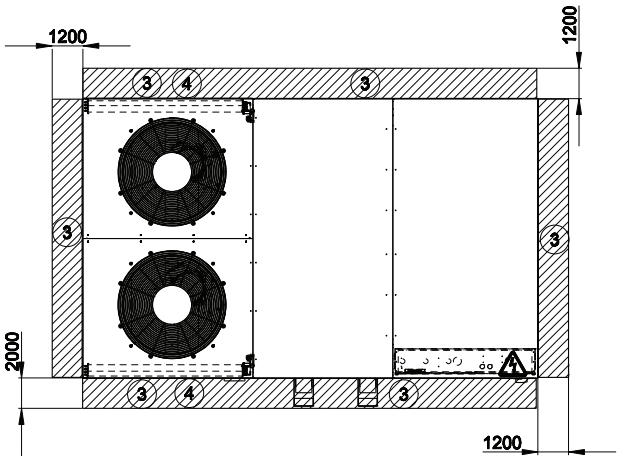

Legend

- Control box
- ① Control cable entry
- ② Power cable entry
- ③ Service clearances required
- ④ Air flow clearances required
- ⑤ Supply air
- ⑥ Return air
- ⑦ Gas inlet opening
- Air outlet, do not obstruct

When designing an installation, always use up-to-date drawings, available from your local Carrier office.

Please refer to the certified dimensional drawings for the units with options such as economizer, power exhaust, air return fan, etc.

Dimensions, mm (continued)

48UA-UH 100

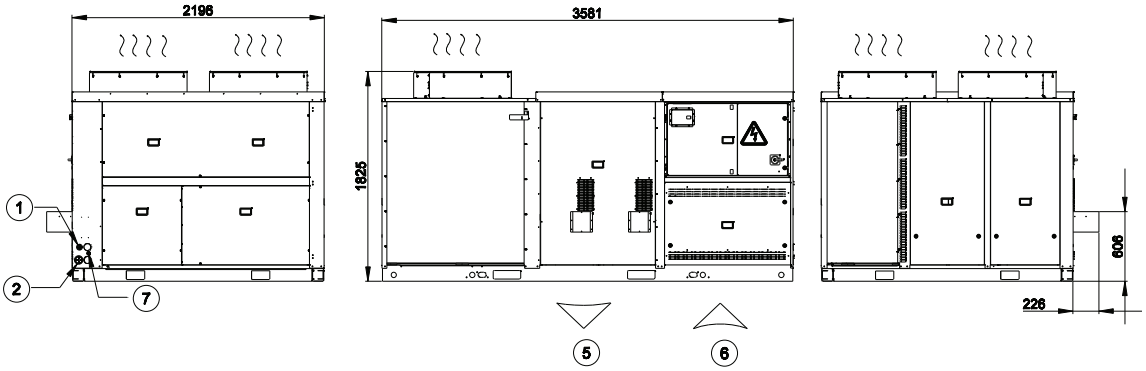

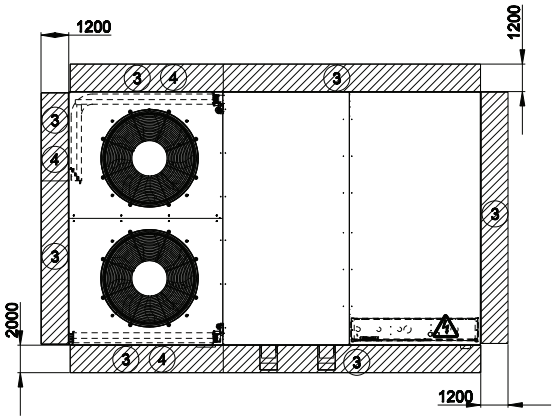

48UA-UH 120

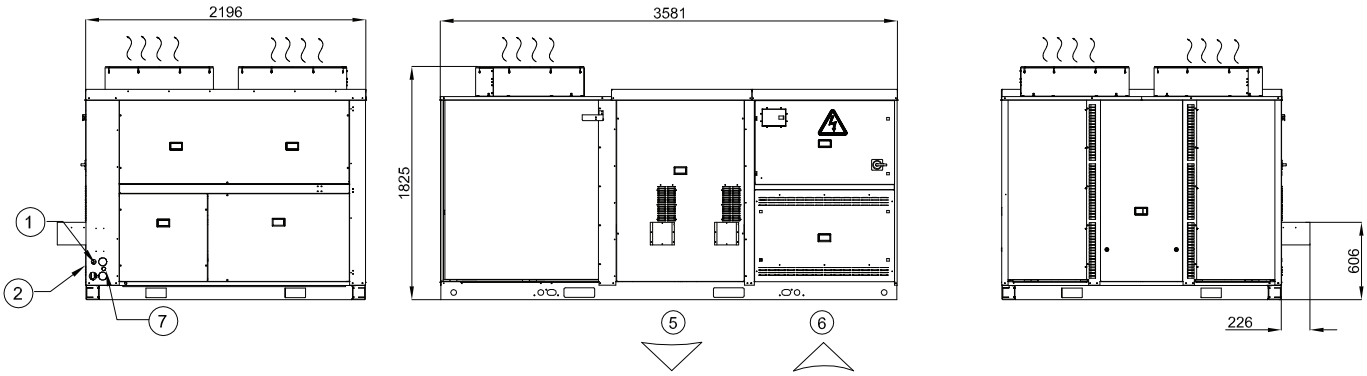

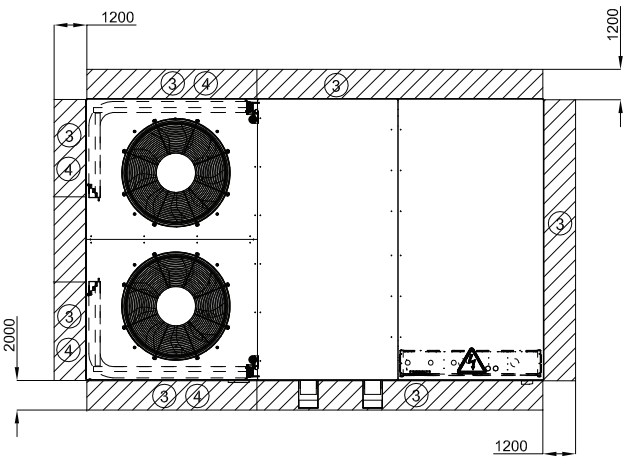

Legend

- Control box
- ① Control cable entry
- ② Power cable entry
- ③ Service clearances required
- ④ Air flow clearances required
- ⑤ Supply air
- ⑥ Return air
- ⑦ Gas inlet opening
- Air outlet, do not obstruct

When designing an installation, always use up-to-date drawings, available from your local Carrier office.

Please refer to the certified dimensional drawings for the units with options such as economizer, power exhaust, air return fan, etc.

Cooling capacities

48/50UA 045

48/50UA 045 - Standard unit - cooling mode

OAT, °C		Evaporator air volume - l/s																													
		2022 (7300)						2275 (8200)						2528 (9100)						2781 (10000)						3034 (10900)					
		Indoor entering air wet bulb temperature, evaporator, °C																													
		23	21	19	17	15	13	23	21	19	17	15	13	23	21	19	17	15	13	23	21	19	17	15	13	23	21	19	17	15	13
10	TC	59.43	55.96	52.67	49.49	46.56	45.54	60.39	56.93	53.62	50.39	48.05	47.20	61.21	57.74	54.41	51.17	49.44	48.64	61.88	58.42	55.06	51.95	50.81	49.92	62.45	59.00	55.63	52.58	52.00	51.05
	SC	26.71	31.38	35.97	40.52	44.20	45.54	27.67	32.75	37.80	42.69	46.28	47.20	28.58	34.08	39.54	44.69	47.59	48.64	29.46	35.34	41.23	46.65	48.59	49.92	30.26	36.56	42.85	48.48	49.34	51.05
	kW	9.87	9.55	9.25	8.96	8.70	8.62	9.96	9.64	9.34	9.05	8.84	8.77	10.04	9.72	9.41	9.12	8.97	8.91	10.11	9.79	9.48	9.20	9.10	9.03	10.17	9.85	9.53	9.26	9.21	9.13
10	TC	56.81	53.51	50.30	47.20	44.74	43.90	57.73	54.39	51.21	48.03	46.16	45.45	58.48	55.14	51.96	48.87	47.62	46.82	59.10	55.76	52.56	49.54	49.40	48.01	59.63	56.27	53.00	50.19	49.40	49.08
	SC	25.83	30.46	35.00	39.49	43.00	43.90	26.79	31.82	36.83	41.61	44.59	45.45	27.70	33.13	38.57	43.63	45.68	46.82	28.54	34.38	40.24	45.53	48.74	48.01	29.37	35.61	41.82	47.25	48.74	49.08
	kW	10.83	10.51	10.19	9.87	9.64	9.57	10.93	10.59	10.28	9.96	9.78	9.72	11.01	10.67	10.36	10.05	9.93	9.86	11.08	10.74	10.42	10.12	10.12	9.99	11.13	10.79	10.46	10.19	10.12	10.10
25	TC	51.30	48.28	45.38	42.54	41.02	40.43	52.06	49.02	46.10	43.40	42.02	41.78	52.66	49.62	46.68	44.01	43.02	42.96	53.11	50.11	47.13	44.72	43.98	44.00	53.52	50.51	47.46	45.51	44.91	44.92
	SC	24.02	28.52	33.02	37.29	39.65	40.43	24.93	29.88	34.82	39.40	41.57	41.78	25.80	31.17	36.55	41.18	42.83	42.96	26.63	32.41	38.17	42.85	43.98	44.00	27.43	33.62	39.68	44.02	44.91	44.92
	kW	12.96	12.60	12.26	11.93	11.76	11.70	13.05	12.69	12.35	12.04	11.89	11.87	13.13	12.77	12.43	12.12	12.02	12.01	13.18	12.83	12.48	12.21	12.14	12.14	13.23	12.89	12.52	12.30	12.25	12.25
30	TC	51.93	48.71	45.62	42.61	41.03	40.38	52.79	49.50	46.39	43.51	41.86	41.78	53.46	50.16	47.04	44.21	43.08	43.01	54.02	50.71	47.55	44.92	44.09	44.10	54.49	51.16	47.91	45.74	45.07	45.08
	SC	24.23	28.68	33.11	37.33	39.65	40.38	25.17	30.05	34.94	39.46	41.66	41.78	26.06	31.36	36.68	41.38	42.90	43.01	26.91	32.62	38.33	43.00	44.09	44.10	27.74	33.84	39.86	44.22	45.07	45.08
	kW	11.85	11.63	11.41	11.19	11.08	11.05	11.92	11.68	11.47	11.26	11.16	11.16	11.97	11.73	11.52	11.32	11.25	11.25	12.01	11.77	11.55	11.37	11.33	11.33	12.05	11.81	11.57	11.43	11.40	11.40
35	TC	48.99	45.94	43.01	40.27	39.25	38.54	49.71	46.65	43.70	41.02	39.88	39.85	50.30	47.21	44.26	41.74	40.97	40.98	50.79	47.69	44.67	42.56	41.98	41.99	51.20	48.06	45.07	43.42	42.88	42.88
	SC	23.25	27.68	32.09	36.22	37.71	38.54	24.16	29.02	33.89	38.25	39.75	39.85	25.04	30.32	35.61	39.97	40.97	40.98	25.89	31.57	37.19	41.26	41.98	41.99	26.71	32.78	38.70	42.11	42.88	42.88
	kW	12.99	12.77	12.55	12.34	12.26	12.22	13.05	12.83	12.60	12.40	12.33	12.33	13.10	12.87	12.65	12.46	12.42	12.42	13.14	12.91	12.68	12.53	12.50	12.50	13.17	12.94	12.71	12.60	12.57	12.57
40	TC	45.99	43.11	40.35	37.82	37.02	36.64	46.59	43.73	40.95	38.52	37.83	37.84	47.12	44.22	41.40	39.38	38.87	38.88	47.55	44.62	41.79	40.25	39.79	39.80	47.87	44.96	42.23	41.42	40.60	40.61
	SC	22.26	26.66	31.05	35.06	36.95	36.64	23.15	28.00	32.83	36.89	37.83	37.84	24.02	29.27	34.47	38.24	38.87	38.88	24.86	30.51	36.01	39.08	39.79	39.80	25.67	31.72	37.50	39.62	40.60	40.61
	kW	14.24	14.00	13.78	13.57	13.50	13.49	14.29	14.05	13.83	13.63	13.60	13.60	14.34	14.10	13.86	13.71	13.68	13.69	14.38	14.14	13.90	13.78	13.76	13.76	14.40	14.17	13.94	13.87	13.83	13.83
45	TC	42.83	40.15	37.60	35.32	34.66	34.66	43.37	40.68	38.06	36.20	35.74	35.75	43.82	41.11	38.48	37.09	36.69	36.70	44.19	41.46	38.95	37.65	37.53	37.54	44.49	41.77	39.30	38.48	38.26	38.27
	SC	21.22	25.58	29.96	33.76	34.66	34.66	22.12	26.91	31.67	35.18	35.74	35.75	22.98	28.19	33.25	36.05	36.69	36.70	23.82	29.43	34.80	37.28	37.53	37.54	24.62	30.65	36.24	37.98	38.26	38.27
	kW	15.52	15.30	15.08	14.88	14.85	14.85	15.57	15.34	15.11	14.97	14.95	14.95	15.61	15.38	15.15	15.05	15.03	15.03	15.65	15.42	15.20	15.11	15.11	15.11	15.68	15.44	15.24	15.18	15.17	15.17
48	TC	40.90	38.35	35.92	33.93	33.43	33.44	41.40	38.82	36.28	34.82	34.46	34.47	41.80	39.21	36.77	35.77	35.35	35.36	42.13	39.53	37.15	36.31	36.13	36.14	42.42	39.82	37.47	37.01	36.82	36.83
	SC	20.59	24.94	29.31	32.81	33.43	33.44	21.49	26.26	30.93	33.95	34.46	34.47	22.35	27.54	32.52	34.67	35.35	35.36	23.18	28.78	34.01	35.32	36.13	36.14	23.99	30.00	35.29	36.96	36.82	36.83
	kW	16.32	16.09	15.88	15.71	15.69	15.69	16.36	16.14	15.91	15.79	15.78	15.78	16.40	16.18	15.96	15.87	15.86	15.86	16.43	16.21	16.00	15.94	15.93	15.93	16.46	16.23	16.03	15.99	15.99	15.99

Legend
OAT Outdoor entering air temperature, condenser, °C
TC Total gross cooling capacity, kW
SC Sensible gross cooling capacity, kW
kW Compressor power input, kW

Cooling capacities (continued)

48/50UA 055

48/50UA 055 - Standard unit - cooling mode

OAT, °C		Evaporator air volume - l/s (m³/h)																													
		2755 (10000)						3100 (11200)						3444 (12400)						3788 (13600)						4133 (14900)					
		Indoor entering air wet bulb temperature, evaporator, °C																													
		23	21	19	17	15	13	23	21	19	17	15	13	23	21	19	17	15	13	23	21	19	17	15	13	23	21	19	17	15	13
10	TC	70.27	66.12	62.17	58.31	55.56	54.38	71.33	67.18	63.23	59.36	57.25	56.23	72.24	68.08	64.11	60.28	57.85	57.83	72.99	68.80	64.77	61.19	60.53	59.24	73.64	69.45	65.34	61.76	61.54	60.49
	SC	31.75	37.54	43.25	48.86	52.98	54.38	32.90	39.19	45.46	51.40	54.76	56.23	34.02	40.80	47.58	53.73	57.72	57.83	35.05	42.30	49.57	55.98	57.10	59.24	36.07	43.81	51.51	57.84	57.81	60.49
	kW	12.09	11.73	11.40	11.06	10.83	10.74	12.19	11.83	11.49	11.15	10.98	10.91	12.27	11.91	11.57	11.24	11.05	11.05	12.34	11.98	11.63	11.33	11.27	11.17	12.40	12.04	11.68	11.38	11.37	11.29
15	TC	66.98	63.06	59.27	55.51	53.24	52.34	67.96	64.04	60.21	56.64	55.10	54.07	68.76	64.77	60.98	57.49	55.69	55.57	69.44	65.45	61.60	58.24	58.13	56.89	70.05	66.02	62.02	59.00	58.36	58.06
	SC	30.70	36.44	42.13	47.59	51.14	52.34	31.83	38.09	44.31	50.11	52.52	54.07	32.90	39.63	46.37	52.41	55.31	55.57	33.94	41.15	48.35	54.48	54.70	56.89	34.96	42.65	50.24	56.09	57.65	58.06
	kW	13.19	12.83	12.47	12.10	11.90	11.83	13.29	12.93	12.56	12.22	12.08	12.00	13.37	12.99	12.64	12.31	12.15	12.14	13.44	13.06	12.71	12.39	12.38	12.28	13.51	13.12	12.75	12.47	12.41	12.39
25	TC	60.34	56.81	53.39	50.11	49.08	48.17	61.13	57.56	54.14	51.04	49.80	49.67	61.76	58.21	54.67	51.89	50.82	50.96	62.23	58.73	55.07	52.83	52.06	52.08	62.71	59.18	55.64	53.03	53.07	53.08
	SC	28.59	34.25	39.88	45.04	46.73	48.17	29.69	35.85	42.05	47.42	49.37	49.67	30.74	37.40	44.02	49.34	50.82	50.96	31.70	38.88	45.89	50.78	52.06	52.08	32.72	40.37	47.68	53.03	53.07	53.08
	kW	15.69	15.29	14.90	14.54	14.42	14.34	15.79	15.38	15.00	14.65	14.53	14.52	15.86	15.46	15.06	14.75	14.66	14.67	15.91	15.53	15.11	14.87	14.80	14.80	15.97	15.59	15.18	14.92	14.92	14.92
30	TC	61.12	57.34	53.68	50.29	48.16	48.14	62.01	58.17	54.49	51.19	49.83	49.70	62.72	58.84	55.11	52.07	50.89	51.05	63.32	59.43	55.57	53.16	52.27	52.24	63.86	59.93	56.11	53.25	53.28	53.30
	SC	28.83	34.43	39.99	45.12	48.05	48.14	29.96	36.07	42.18	47.51	49.44	49.70	31.04	37.62	44.19	49.47	50.89	51.05	32.04	39.12	46.08	50.96	52.15	52.24	33.07	40.62	47.90	53.25	53.28	53.30
	kW	14.46	14.21	13.96	13.72	13.59	13.59	14.52	14.27	14.02	13.79	13.71	13.71	14.57	14.31	14.06	13.86	13.80	13.80	14.62	14.35	14.10	13.94	13.89	13.89	14.66	14.39	14.14	13.96	13.96	13.97
35	TC	57.66	54.05	50.63	47.48	46.04	45.97	58.38	54.80	51.34	48.36	47.32	47.41	59.01	55.41	51.82	49.40	48.64	48.65	59.54	55.93	52.34	50.38	49.73	49.73	59.99	56.38	52.79	50.68	50.69	50.70
	SC	27.73	33.29	38.84	43.79	45.79	45.97	28.82	34.88	40.98	45.93	47.32	47.41	29.87	36.46	42.91	47.51	48.64	48.65	30.89	37.97	44.74	48.62	49.73	49.73	31.89	39.46	46.49	50.68	50.69	50.70
	kW	15.83	15.57	15.31	15.08	14.99	14.99	15.88	15.63	15.37	15.15	15.09	15.10	15.93	15.68	15.40	15.23	15.19	15.20	15.97	15.72	15.45	15.31	15.28	15.28	16.01	15.75	15.49	15.36	15.36	15.36
40	TC	54.08	50.74	47.54	44.64	43.84	43.74	54.75	51.37	48.09	45.72	45.06	45.07	55.28	51.91	48.59	46.78	46.19	46.20	55.69	52.36	49.05	48.02	47.18	47.19	56.08	52.73	49.56	48.04	48.06	48.08
	SC	26.58	32.13	37.65	42.33	43.58	43.74	27.68	33.72	39.72	44.05	45.06	45.07	28.72	35.28	41.61	45.20	46.19	46.20	29.71	36.78	43.38	45.92	47.18	47.19	30.70	38.26	45.11	48.04	48.06	48.08
	kW	17.34	17.08	16.82	16.60	16.55	16.55	17.40	17.13	16.86	16.69	16.66	16.66	17.44	17.18	16.91	16.78	16.75	16.75	17.47	17.22	16.96	16.87	16.83	16.83	17.50	17.25	17.00	16.91	16.91	16.91
45	TC	50.44	47.39	44.35	42.10	41.48	41.48	51.02	47.93	44.89	43.19	42.68	42.69	51.48	48.37	45.41	44.57	43.69	43.70	51.86	48.75	45.86	45.25	44.58	44.59	52.18	49.07	46.22	45.37	45.37	45.38
	SC	25.44	30.97	36.43	40.57	41.48	41.48	26.52	32.56	38.42	41.80	42.68	42.69	27.55	34.10	40.27	42.49	43.69	43.70	28.55	35.60	42.00	43.31	44.58	44.59	29.53	37.07	43.54	45.26	45.37	45.38
	kW	18.93	18.68	18.43	18.26	18.24	18.24	18.98	18.73	18.47	18.35	18.33	18.34	19.02	18.77	18.53	18.45	18.42	18.42	19.05	18.80	18.57	18.52	18.50	18.50	19.08	18.83	18.61	18.56	18.56	18.56
48	TC	48.24	45.35	42.45	40.54	40.08	40.09	48.75	45.83	43.03	41.72	41.20	41.21	49.16	46.23	43.47	42.78	42.15	42.16	49.50	46.56	43.86	43.62	42.98	42.99	49.80	46.83	44.29	43.71	43.70	43.71
	SC	24.74	30.27	35.68	39.37	40.08	40.09	25.81	31.85	37.63	40.29	41.20	41.21	26.84	33.39	39.44	41.00	42.15	42.16	27.84	34.88	41.08	41.67	42.98	42.99	28.81	36.34	42.43	43.60	43.70	43.71
	kW	19.93	19.69	19.45	19.32	19.31	19.31	19.98	19.74	19.51	19.41	19.40	19.40	20.01	19.77	19.55	19.50	19.48	19.48	20.04	19.81	19.59	19.57	19.55	19.55	20.07	19.83	19.63	19.61	19.61	19.61

Legend
OAT Outdoor entering air temperature, condenser, °C
TC Total gross cooling capacity, kW
SC Sensible gross cooling capacity, kW
kW Compressor power input, kW

Cooling capacities (continued)

48/50UA 065

48/50UA 065 - Standard unit - cooling mode

OAT, °C		Evaporator air volume - l/s (m³/h)																													
		2778 (10000)						3124 (11250)						3472 (12500)						3819 (13750)						4166 (15000)					
		Indoor entering air wet bulb temperature, evaporator, °C																													
		23	21	19	17	15	13	23	21	19	17	15	13	23	21	19	17	15	13	23	21	19	17	15	13	23	21	19	17	15	13
10	TC	83.19	78.20	73.49	69.00	65.52	64.21	84.54	79.58	74.83	70.46	67.59	66.49	85.72	80.74	75.93	71.62	69.21	68.47	86.69	81.68	76.76	72.72	70.79	70.22	87.52	82.51	77.52	73.68	71.80	71.78
	SC	37.85	44.47	51.01	57.31	62.70	64.21	39.23	46.46	53.65	60.50	65.35	66.49	40.57	48.41	56.22	63.46	67.74	68.47	41.83	50.28	58.62	66.16	69.12	70.22	43.09	52.12	60.93	68.69	71.67	71.78
	kW	12.22	11.90	11.59	11.30	11.09	11.01	12.32	11.99	11.68	11.40	11.22	11.16	12.40	12.07	11.75	11.48	11.33	11.29	12.47	12.14	11.81	11.56	11.44	11.41	12.53	12.19	11.86	11.62	11.52	11.52
15	TC	79.79	75.01	70.46	66.18	63.07	62.05	81.09	76.28	71.68	67.56	65.28	64.21	82.15	77.33	72.64	68.61	66.73	66.09	83.04	78.22	73.39	69.71	68.32	67.75	83.82	78.97	74.24	70.60	69.25	69.22
	SC	36.72	43.25	49.76	55.99	60.94	62.05	38.07	45.24	52.39	59.15	62.98	64.21	39.39	47.18	54.92	61.98	65.35	66.09	40.65	49.04	57.28	64.61	66.45	67.75	41.90	50.88	59.59	67.04	69.05	69.22
	kW	13.54	13.20	12.88	12.58	12.37	12.31	13.64	13.30	12.97	12.68	12.53	12.47	13.72	13.38	13.04	12.76	12.64	12.60	13.79	13.44	13.09	12.85	12.76	12.73	13.85	13.50	13.16	12.92	12.83	12.83
25	TC	72.45	68.16	64.02	60.26	58.59	57.46	73.51	69.20	64.92	61.38	59.90	59.38	74.38	70.06	65.77	62.42	61.20	61.03	75.10	70.76	66.56	63.40	62.48	62.47	75.69	71.35	67.25	64.51	63.74	63.76
	SC	34.24	40.72	47.17	53.23	56.18	57.46	35.57	42.68	49.71	56.12	58.61	59.38	36.86	44.59	52.14	58.80	60.69	61.03	38.10	46.43	54.48	61.08	62.40	62.47	39.31	48.24	56.77	62.67	63.74	63.76
	kW	16.50	16.14	15.79	15.48	15.36	15.28	16.60	16.23	15.87	15.58	15.48	15.44	16.68	16.31	15.94	15.68	15.59	15.58	16.74	16.37	16.02	15.77	15.71	15.71	16.80	16.43	16.08	15.87	15.82	15.82
30	TC	70.76	66.44	62.29	57.06	55.53	55.03	71.80	67.46	63.17	59.73	56.83	56.81	72.65	68.30	64.04	60.73	59.61	59.60	73.33	68.98	64.82	61.84	61.00	61.02	73.91	69.55	65.44	62.65	62.27	62.29
	SC	33.67	40.09	46.48	51.70	55.53	55.03	35.01	42.06	49.00	55.29	56.74	56.81	36.30	43.97	51.44	57.90	59.54	59.60	37.53	45.81	53.77	59.88	61.00	61.02	38.74	47.62	56.03	61.70	62.27	62.29
	kW	16.88	16.57	16.27	17.10	17.02	16.94	16.96	16.64	16.33	16.11	17.11	17.11	17.02	16.71	16.40	16.18	16.12	16.12	17.07	16.76	16.46	16.27	16.23	16.23	17.12	16.81	16.51	16.33	16.32	16.32
35	TC	68.55	64.27	60.19	56.51	54.98	54.49	69.53	65.25	61.02	57.75	56.33	56.31	70.34	66.00	61.90	58.74	57.88	57.89	70.99	66.64	62.65	60.01	59.25	59.26	71.56	67.19	63.18	61.02	60.48	60.49
	SC	32.93	39.29	45.64	51.42	53.88	54.49	34.26	41.27	48.13	54.28	56.23	56.31	35.55	43.16	50.56	56.67	57.88	57.89	36.79	44.99	52.90	58.36	59.25	59.26	38.00	46.81	55.12	59.81	60.48	60.49
	kW	17.39	17.14	16.90	16.70	16.63	16.61	17.45	17.20	16.95	16.78	16.71	16.71	17.51	17.25	17.01	16.84	16.81	16.81	17.55	17.29	17.06	16.91	16.89	16.89	17.58	17.33	17.09	16.98	16.96	16.96
40	TC	64.51	60.48	56.54	53.34	52.02	51.92	65.36	61.33	57.45	54.37	53.60	53.60	66.05	62.02	58.23	55.62	55.04	55.05	66.63	62.59	58.78	56.58	56.30	56.31	67.14	63.02	59.35	57.62	57.42	57.44
	SC	31.59	37.92	44.16	49.83	52.02	51.92	32.90	39.87	46.66	52.40	53.60	53.60	34.17	41.77	49.07	54.20	55.04	55.05	35.40	43.60	51.34	55.79	56.30	56.31	36.62	45.38	53.43	56.74	57.42	57.44
	kW	19.17	18.92	18.67	18.48	18.41	18.41	19.23	18.97	18.73	18.55	18.52	18.52	19.28	19.02	18.78	18.63	18.61	18.61	19.32	19.06	18.82	18.71	18.70	18.70	19.35	19.10	18.86	18.78	18.77	18.77
45	TC	60.24	56.52	52.91	50.05	49.23	49.24	61.00	57.24	53.73	51.23	50.76	50.77	61.63	57.83	54.35	52.08	52.07	52.08	62.14	58.32	54.91	53.40	53.21	53.23	62.58	58.63	55.48	54.57	54.24	54.24
	SC	30.18	36.49	42.66	48.05	49.23	49.24	31.49	38.42	45.15	50.01	50.76	50.77	32.77	40.31	47.50	52.03	52.07	52.08	33.99	42.13	49.64	52.68	53.21	53.23	35.20	43.88	51.63	53.03	54.24	54.24
	kW	21.06	20.81	20.56	20.39	20.35	20.35	21.12	20.87	20.63	20.47	20.46	20.46	21.16	20.91	20.68	20.55	20.55	20.55	21.20	20.95	20.72	20.64	20.63	20.63	21.23	20.96	20.76	20.72	20.70	20.71
48	TC	57.70	54.12	50.69	48.08	47.55	47.56	58.39	54.78	51.44	49.17	48.99	49.00	58.95	55.32	51.95	50.23	50.22	50.23	59.42	55.70	52.56	51.22	51.30	51.31	59.83	55.98	53.13	52.17	52.24	52.25
	SC	29.35	35.63	41.74	46.77	47.55	47.56	30.66	37.56	44.21	48.57	48.99	49.00	31.92	39.44	46.48	50.17	50.22	50.23	33.15	41.24	48.54	51.22	51.30	51.31	34.36	42.94	50.44	52.17	52.24	52.25
	kW	22.24	21.99	21.75	21.58	21.56	21.56	22.29	22.04	21.81	21.67	21.67	21.67	22.33	22.08	21.85	21.75	21.76	21.76	22.36	22.11	21.90	21.82	21.83	21.83	22.39	22.12	21.94	21.88	21.90	21.90

Legend
OAT Outdoor entering air temperature, condenser, °C
TC Total gross cooling capacity, kW
SC Sensible gross cooling capacity, kW
kW Compressor power input, kW

Cooling capacities (continued)

48/50UA 075

48/50UA 075 - Standard unit - cooling mode

OAT, °C		Evaporator air volume - l/s (m³/h)																													
		3155 (11400)						3550 (12800)						3944 (14200)						4388 (15800)						4733 (17000)					
		Indoor entering air wet bulb temperature, evaporator, °C																													
		23	21	19	17	15	13	23	21	19	17	15	13	23	21	19	17	15	13	23	21	19	17	15	13	23	21	19	17	15	13
10	TC	96.08	90.60	85.36	80.32	76.38	74.62	97.63	92.19	86.92	82.00	78.48	77.12	98.91	93.46	88.19	83.33	80.69	79.38	99.98	94.53	89.12	84.57	81.37	81.36	100.79	95.43	89.97	85.75	83.13	83.12
	SC	43.50	51.16	58.68	65.90	72.26	74.62	45.09	53.41	61.67	69.49	75.55	77.12	46.57	55.58	64.56	72.87	77.82	79.38	48.00	57.72	67.31	75.95	81.24	81.36	49.39	59.80	69.91	78.81	82.98	83.12
	kW	15.55	15.13	14.73	14.36	14.08	13.97	15.68	15.26	14.85	14.49	14.24	14.16	15.78	15.36	14.95	14.59	14.41	14.33	15.87	15.45	15.03	14.69	14.48	14.48	15.94	15.53	15.10	14.79	14.61	14.61
15	TC	92.46	87.22	82.17	77.38	73.71	72.25	93.91	88.66	83.61	78.95	76.01	74.73	95.08	89.83	84.67	80.14	76.89	76.88	95.99	90.76	85.53	81.43	78.76	78.76	96.79	91.54	86.47	82.48	80.43	80.42
	SC	42.28	49.86	57.34	64.50	70.58	72.25	43.84	52.11	60.33	68.07	73.44	74.73	45.29	54.27	63.17	71.32	76.75	76.88	46.71	56.37	65.86	74.34	78.63	78.76	48.11	58.42	68.47	77.16	80.29	80.42
	kW	17.44	17.00	16.58	16.19	15.91	15.81	17.57	17.13	16.70	16.32	16.10	16.01	17.67	17.23	16.79	16.42	16.19	16.19	17.76	17.32	16.87	16.54	16.35	16.35	17.84	17.39	16.95	16.64	16.49	16.49
25	TC	84.45	79.66	75.09	70.94	68.20	67.29	85.54	80.78	76.09	72.16	70.13	69.48	86.46	81.71	77.00	73.42	71.37	71.36	87.28	82.50	77.90	74.38	73.01	73.00	87.96	83.16	78.68	75.47	74.46	74.44
	SC	39.58	47.03	54.46	61.48	66.20	67.29	41.05	49.21	57.32	64.79	68.71	69.48	42.48	51.34	60.04	67.89	71.26	71.36	43.91	53.44	62.69	70.67	72.87	73.00	45.30	55.50	65.28	72.79	74.33	74.44
	kW	21.60	21.12	20.67	20.27	20.02	19.95	21.72	21.24	20.77	20.39	20.22	20.17	21.82	21.35	20.86	20.53	20.36	20.36	21.91	21.43	20.97	20.63	20.53	20.53	21.98	21.50	21.06	20.75	20.67	20.67
30	TC	84.94	79.81	73.25	69.14	65.07	64.58	86.13	81.01	74.24	70.44	69.20	67.99	87.14	82.02	77.01	71.65	69.85	69.84	88.03	82.88	77.97	72.68	71.49	71.46	88.80	83.62	78.80	73.84	72.89	72.90
	SC	39.74	47.08	53.71	60.62	63.89	64.58	41.25	49.30	56.57	63.91	66.09	67.99	42.70	51.45	60.04	66.95	69.74	69.84	44.15	53.58	62.73	69.56	71.31	71.46	45.57	55.67	65.33	71.48	72.89	72.90
	kW	20.04	19.77	21.12	20.80	22.26	22.24	20.12	19.84	21.20	20.92	20.81	20.76	20.17	19.90	19.62	21.02	20.91	20.91	20.23	19.95	19.68	21.11	21.04	21.04	20.27	19.99	19.73	21.21	21.15	21.15
35	TC	80.48	75.65	71.09	67.02	65.25	64.15	81.62	76.79	72.04	68.37	66.93	66.26	82.58	77.71	73.00	69.51	68.09	68.07	83.39	78.50	73.88	70.65	69.67	69.64	84.09	79.17	74.67	71.71	71.05	71.06
	SC	38.26	45.54	52.83	59.61	63.04	64.15	39.77	47.77	55.67	62.86	65.47	66.26	41.23	49.92	58.38	65.83	67.97	68.07	42.67	52.05	61.06	68.22	69.56	69.64	44.08	54.14	63.66	69.83	71.05	71.06
	kW	22.29	22.00	21.73	21.49	21.39	21.36	22.36	22.07	21.78	21.58	21.51	21.48	22.42	22.13	21.85	21.65	21.59	21.59	22.47	22.18	21.91	21.72	21.69	21.69	22.51	22.23	21.96	21.80	21.77	21.77
40	TC	75.96	71.42	66.99	63.36	61.26	61.23	76.99	72.43	67.99	64.64	63.21	63.18	77.84	73.25	68.89	65.75	64.88	64.86	78.56	73.94	69.69	66.89	66.32	66.32	79.17	74.52	70.19	68.24	67.61	67.63
	SC	36.75	43.99	51.16	57.80	61.17	61.23	38.25	46.21	53.97	60.97	63.10	63.18	39.70	48.35	56.69	63.51	64.79	64.86	41.13	50.47	59.35	65.31	66.32	66.32	42.53	52.54	61.78	66.27	67.61	67.63
	kW	24.67	24.38	24.09	23.87	23.76	23.76	24.74	24.45	24.16	23.96	23.89	23.89	24.80	24.51	24.23	24.03	24.01	24.01	24.85	24.55	24.28	24.12	24.10	24.10	24.89	24.59	24.32	24.20	24.18	24.19
45	TC	71.23	66.97	62.81	59.57	58.17	58.15	72.15	67.85	63.78	60.71	59.92	59.94	72.88	68.56	64.58	62.07	61.46	61.47	73.51	69.17	65.14	63.36	62.80	62.81	74.04	69.54	65.78	64.62	63.97	63.99
	SC	35.19	42.38	49.43	55.85	58.08	58.15	36.68	44.58	52.24	58.67	59.92	59.94	38.11	46.72	54.93	60.58	61.46	61.47	39.54	48.83	57.46	61.56	62.80	62.81	40.93	50.83	59.69	62.56	63.97	63.99
	kW	27.15	26.87	26.58	26.38	26.31	26.31	27.21	26.93	26.66	26.46	26.43	26.43	27.26	26.98	26.72	26.56	26.54	26.54	27.31	27.03	26.76	26.64	26.64	26.64	27.35	27.05	26.81	26.73	26.72	26.72
48	TC	68.29	64.22	60.28	57.23	56.22	56.21	69.11	65.02	61.18	58.51	57.88	57.90	69.79	65.66	61.84	59.63	59.33	59.34	70.37	66.13	62.44	60.80	60.59	60.60	70.85	66.47	63.10	61.93	61.69	61.71
	SC	34.22	41.39	48.38	54.60	56.17	56.21	35.71	43.59	51.18	56.94	57.88	57.90	37.14	45.71	53.82	58.80	59.33	59.34	38.55	47.80	56.18	59.97	60.59	60.60	39.94	49.75	58.40	60.98	61.69	61.71
	kW	28.67	28.38	28.10	27.90	27.85	27.85	28.73	28.44	28.18	28.00	27.98	27.98	28.77	28.49	28.22	28.09	28.08	28.08	28.82	28.52	28.28	28.18	28.18	28.18	28.85	28.55	28.33	28.26	28.26	28.26

Legend
OAT Outdoor entering air temperature, condenser, °C
TC Total gross cooling capacity, kW
SC Sensible gross cooling capacity, kW
kW Compressor power input, kW

Cooling capacities (continued)

48/50UA 085

48/50UA 085 - Standard unit - cooling mode

OAT, °C		Evaporator air volume - l/s (m³/h)																													
		4440 (16000)						4995 (18000)						5550 (20000)						6105 (22000)						6660 (24000)					
		Indoor entering air wet bulb temperature, evaporator, °C																													
		23	21	19	17	15	13	23	21	19	17	15	13	23	21	19	17	15	13	23	21	19	17	15	13	23	21	19	17	15	13
10	TC	120.66	113.78	107.16	101.30	97.14	96.48	122.30	115.43	108.61	103.10	99.66	99.64	123.65	116.73	110.03	104.87	102.38	102.36	124.74	117.79	111.33	106.38	104.78	104.72	125.70	118.72	112.38	107.79	107.14	106.81
	SC	56.73	67.51	78.24	88.50	95.73	96.48	58.93	70.76	82.43	93.42	99.51	99.64	61.04	73.89	86.51	97.95	102.21	102.36	63.09	76.95	90.44	102.04	104.49	104.72	65.14	79.99	94.25	104.81	107.14	106.81
	kW	17.87	17.32	16.80	16.35	16.04	15.99	18.02	17.46	16.92	16.50	16.25	16.25	18.14	17.58	17.05	16.65	16.47	16.47	18.24	17.68	17.16	16.78	16.67	16.66	18.33	17.76	17.26	16.90	16.86	16.84
15	TC	115.87	109.26	102.77	97.18	93.88	93.29	117.35	110.73	104.23	99.06	96.31	96.28	118.53	111.93	105.56	100.70	99.39	98.87	119.56	112.93	106.69	102.40	101.31	101.12	120.45	113.79	107.64	103.69	103.04	103.07
	SC	55.13	65.84	76.46	86.58	92.47	93.29	57.30	69.06	80.66	91.39	96.16	96.28	59.39	72.19	84.69	95.71	99.17	98.87	61.44	75.26	88.57	99.23	101.31	101.12	63.49	78.30	92.34	101.47	103.04	103.07
	kW	19.71	19.14	18.59	18.12	17.87	17.81	19.85	19.28	18.72	18.30	18.08	18.08	19.97	19.40	18.85	18.45	18.35	18.31	20.07	19.50	18.96	18.60	18.52	18.51	20.16	19.58	19.05	18.73	18.68	18.69
25	TC	105.26	99.28	93.37	88.73	86.43	86.41	106.54	100.50	94.72	90.37	89.07	89.04	107.56	101.50	95.86	92.23	91.27	91.29	108.41	102.29	96.73	93.78	93.22	93.24	109.14	102.86	97.55	94.90	94.91	94.93
	SC	51.60	62.19	72.63	82.37	86.31	86.41	53.77	65.41	76.78	86.75	88.92	89.04	55.87	68.54	80.74	89.94	91.27	91.29	57.91	71.58	84.52	92.02	93.22	93.24	59.94	74.53	87.99	94.90	94.91	94.93
	kW	23.71	23.12	22.53	22.09	21.89	21.89	23.85	23.25	22.68	22.27	22.16	22.16	23.97	23.36	22.81	22.47	22.39	22.39	24.06	23.45	22.91	22.63	22.59	22.60	24.14	23.52	23.01	22.77	22.77	22.77
30	TC	103.41	97.29	91.28	84.35	82.75	82.74	104.71	98.54	92.72	86.03	85.16	85.17	108.52	99.55	93.82	90.33	87.23	87.25	109.47	100.38	94.68	92.00	89.04	89.06	110.30	100.96	95.61	93.56	90.57	90.59
	SC	51.02	61.49	71.80	80.09	82.65	82.74	53.20	64.73	75.98	83.77	85.16	85.17	56.18	67.88	79.92	88.03	87.23	87.25	58.25	70.94	83.67	90.13	89.04	89.06	60.32	73.92	87.03	92.20	90.57	90.59
	kW	23.69	23.21	22.73	24.27	24.13	24.13	23.80	23.31	22.86	24.47	24.39	24.40	21.87	23.40	22.95	22.69	24.63	24.63	21.93	23.48	23.03	22.84	24.83	24.83	21.99	23.53	23.12	22.97	25.00	25.00
35	TC	100.29	94.15	88.29	83.79	82.17	82.18	101.53	95.38	89.67	85.61	84.71	84.72	102.56	96.34	90.66	86.94	86.89	86.89	103.39	97.04	91.52	88.76	88.79	88.81	104.10	97.73	92.51	90.42	90.45	90.46
	SC	49.97	60.36	70.56	79.80	82.17	82.18	52.16	63.61	74.74	83.44	84.71	84.72	54.29	66.76	78.64	86.71	86.89	86.89	56.35	69.78	82.26	88.76	88.79	88.81	58.40	72.76	85.58	90.42	90.45	90.46
	kW	23.90	23.53	23.17	22.91	22.83	22.83	23.99	23.61	23.26	23.03	22.99	22.99	24.05	23.67	23.33	23.13	23.13	23.13	24.11	23.72	23.39	23.25	23.25	23.25	24.16	23.77	23.46	23.35	23.35	23.36
40	TC	94.34	88.61	83.18	79.09	78.22	78.23	95.45	89.64	84.34	80.88	80.55	80.57	96.32	90.41	85.23	82.55	82.55	82.56	97.05	91.10	86.15	84.26	84.28	84.30	97.68	91.70	87.01	85.80	85.80	85.82
	SC	48.03	58.37	68.47	76.99	78.22	78.23	50.20	61.60	72.55	80.10	80.55	80.57	52.31	64.70	76.32	82.48	82.55	82.56	54.36	67.69	79.73	84.26	84.28	84.30	56.40	70.62	82.87	85.71	85.80	85.82
	kW	26.23	25.86	25.51	25.26	25.22	25.22	26.31	25.93	25.60	25.40	25.38	25.38	26.37	25.99	25.67	25.51	25.51	25.52	26.43	26.04	25.74	25.63	25.63	25.63	26.47	26.08	25.80	25.74	25.74	25.74
45	TC	88.12	82.76	77.81	74.20	74.05	74.07	89.06	83.60	78.74	76.51	76.16	76.18	89.83	84.29	79.70	77.98	77.98	77.99	90.45	84.90	80.57	79.53	79.53	79.54	90.97	85.46	81.42	80.88	80.90	80.91
	SC	46.02	56.31	66.29	73.66	74.05	74.07	48.18	59.51	70.23	75.49	76.16	76.18	50.27	62.56	73.77	77.91	77.98	77.99	52.32	65.52	76.97	79.44	79.53	79.54	54.35	68.38	79.52	80.88	80.90	80.91
	kW	28.69	28.33	28.00	27.78	27.77	27.77	28.76	28.39	28.07	27.94	27.92	27.92	28.82	28.44	28.15	28.05	28.05	28.05	28.87	28.49	28.22	28.16	28.16	28.16	28.91	28.54	28.28	28.26	28.26	28.26
48	TC	84.26	79.15	74.45	71.72	71.44	71.45	85.12	79.86	75.35	73.79	73.42	73.44	85.80	80.52	76.32	75.13	75.10	75.11	86.35	81.08	77.08	76.54	76.55	76.57	86.82	81.64	78.13	77.80	77.82	77.83
	SC	44.78	55.05	64.92	71.04	71.44	71.45	46.93	58.21	68.73	72.67	73.42	73.44	49.02	61.25	72.15	74.98	75.10	75.11	51.05	64.15	75.08	76.54	76.55	76.57	53.08	66.98	76.94	77.80	77.82	77.83
	kW	30.20	29.85	29.52	29.35	29.34	29.34	30.27	29.90	29.60	29.50	29.48	29.48	30.32	29.95	29.68	29.61	29.61	29.61	30.36	30.00	29.74	29.72	29.72	29.72	30.40	30.05	29.83	29.81	29.81	29.81

Legend
OAT Outdoor entering air temperature, condenser, °C
TC Total gross cooling capacity, kW
SC Sensible gross cooling capacity, kW
kW Compressor power input, kW

Cooling capacities (continued)

48/50UA 100

48/50UA100 - Standard unit - cooling mode

OAT, °C		Evaporator air volume - l/s (m³/h)																													
		4440 (16000)						4995 (18000)						5550 (20000)						6105 (22000)						6660 (24000)					
		Indoor entering air wet bulb temperature, evaporator, °C																													
		23	21	19	17	15	13	23	21	19	17	15	13	23	21	19	17	15	13	23	21	19	17	15	13	23	21	19	17	15	13
10	TC	140.52	132.73	125.15	117.94	111.96	109.94	142.81	135.07	127.50	120.33	115.06	113.81	144.70	136.95	129.36	122.27	117.19	117.19	146.26	138.50	130.94	123.97	120.18	120.16	147.59	139.80	132.09	125.56	122.66	122.71
	SC	63.77	74.98	86.02	96.95	106.74	109.94	66.11	78.41	90.56	102.44	112.00	113.81	68.35	81.68	94.91	107.69	117.10	117.19	70.51	84.86	99.16	112.64	120.01	120.16	72.63	88.01	103.27	117.23	122.27	122.71
	kW	23.35	22.57	21.82	21.13	20.55	20.37	23.60	22.82	22.07	21.37	20.86	20.75	23.81	23.03	22.27	21.57	21.09	21.09	23.99	23.20	22.45	21.73	21.39	21.39	24.14	23.35	22.57	21.93	21.66	21.66
15	TC	133.87	126.50	119.35	112.44	107.00	105.59	135.94	128.58	121.40	114.57	110.22	109.22	137.64	130.30	123.10	116.46	112.39	112.37	139.05	131.66	124.47	118.03	115.83	115.13	140.26	132.88	125.53	119.37	117.62	117.56
	SC	61.37	72.44	83.40	94.14	103.47	105.59	63.65	75.78	87.81	99.48	107.24	109.22	65.83	79.02	92.10	104.62	112.24	112.37	67.96	82.16	96.29	109.32	113.55	115.13	70.05	85.25	100.28	113.57	117.32	117.56
	kW	25.47	24.67	23.91	23.19	22.63	22.49	25.71	24.91	24.15	23.44	22.98	22.88	25.91	25.11	24.34	23.64	23.23	23.23	26.08	25.28	24.51	23.79	23.61	23.53	26.23	25.43	24.63	23.98	23.81	23.80
25	TC	119.92	113.42	107.09	101.09	96.43	96.43	121.58	115.07	108.74	102.84	99.54	99.54	122.92	116.36	110.02	104.43	102.23	102.23	124.04	117.48	111.00	105.94	104.54	104.54	125.05	118.42	112.06	107.44	106.59	106.61
	SC	56.35	67.17	77.90	88.29	96.34	96.43	58.53	70.38	82.17	93.32	99.47	99.54	60.62	73.47	86.26	97.91	102.15	102.23	62.66	76.52	90.14	101.99	104.46	104.54	64.70	79.51	94.00	104.18	106.59	106.61
	kW	30.08	29.27	28.50	27.77	27.22	27.22	30.30	29.49	28.72	28.00	27.61	27.61	30.49	29.67	28.90	28.21	27.96	27.96	30.64	29.83	29.03	28.37	28.25	28.25	30.79	29.97	29.18	28.62	28.52	28.53
30	TC	122.26	115.09	103.70	95.20	92.08	91.65	124.18	116.95	105.29	96.82	94.48	94.49	125.72	118.41	106.52	98.22	96.92	96.92	127.01	119.70	112.57	102.61	99.02	99.04	128.22	120.78	113.73	104.12	103.35	103.38
	SC	57.24	67.92	76.21	85.20	90.75	91.65	59.52	71.22	80.40	89.96	94.45	94.49	61.67	74.37	84.42	94.25	96.85	96.92	63.76	77.50	91.03	99.31	99.02	99.04	65.88	80.56	94.97	101.35	103.35	103.38
	kW	27.14	26.64	29.05	30.28	29.89	29.83	27.29	26.78	29.24	30.51	30.21	30.22	27.41	26.89	29.38	30.71	30.55	30.55	27.51	26.99	26.49	28.94	30.84	30.85	27.61	27.08	26.58	29.18	29.11	29.11
35	TC	114.78	108.06	101.61	95.61	92.31	91.89	116.44	109.69	103.21	97.36	95.36	94.90	117.78	110.96	104.35	98.87	97.49	97.49	118.90	112.05	105.50	100.65	99.75	99.76	119.91	113.00	106.54	102.00	101.77	101.78
	SC	54.57	65.10	75.58	85.62	91.06	91.89	56.76	68.35	79.85	90.49	93.53	94.90	58.87	71.44	83.88	94.90	97.41	97.49	60.92	74.47	87.77	98.13	99.75	99.76	62.97	77.46	91.58	100.67	101.77	101.78
	kW	29.69	29.18	28.70	28.25	28.02	27.99	29.82	29.32	28.83	28.39	28.26	28.22	29.94	29.42	28.92	28.52	28.42	28.42	30.03	29.52	29.02	28.66	28.60	28.60	30.12	29.60	29.11	28.78	28.76	28.76
40	TC	107.05	100.82	94.85	89.41	86.80	86.80	108.48	102.18	96.14	91.01	89.52	89.52	109.62	103.33	97.27	92.59	91.84	91.86	110.62	104.26	98.31	94.42	93.87	93.90	111.46	105.07	99.09	95.86	95.67	95.69
	SC	51.82	62.22	72.58	82.23	86.73	86.80	53.96	65.37	76.68	86.77	89.45	89.52	56.01	68.42	80.59	90.33	91.84	91.86	58.03	71.37	84.38	92.76	93.87	93.90	60.02	74.30	87.99	94.69	95.67	95.69
	kW	32.41	31.91	31.43	31.00	30.80	30.80	32.54	32.03	31.55	31.14	31.03	31.03	32.64	32.14	31.65	31.28	31.23	31.23	32.73	32.23	31.74	31.43	31.40	31.40	32.81	32.30	31.82	31.56	31.55	31.55
45	TC	99.04	93.33	87.82	83.03	81.46	81.46	100.25	94.47	88.94	84.63	83.87	83.88	101.29	95.44	89.99	86.46	85.92	85.94	102.09	96.24	90.76	88.18	87.74	87.75	102.79	96.92	91.50	89.54	89.33	89.35
	SC	48.98	59.24	69.41	78.63	81.40	81.46	51.07	62.29	73.36	82.40	83.87	83.88	53.12	65.27	77.17	84.52	85.92	85.94	55.06	68.16	80.74	86.70	87.74	87.75	57.00	71.02	84.13	89.45	89.33	89.35
	kW	35.30	34.81	34.34	33.94	33.81	33.81	35.41	34.92	34.45	34.09	34.03	34.03	35.51	35.01	34.55	34.25	34.22	34.22	35.59	35.09	34.63	34.41	34.38	34.38	35.66	35.16	34.70	34.54	34.53	34.53
48	TC	94.16	88.72	83.50	79.16	78.12	78.12	95.24	89.79	84.60	80.64	80.36	80.38	96.15	90.66	85.53	83.00	82.29	82.31	96.89	91.37	86.25	84.12	83.94	83.96	97.51	91.97	87.01	85.42	85.41	85.43
	SC	47.27	57.40	67.43	76.20	78.06	78.12	49.32	60.43	71.31	79.74	80.36	80.38	51.32	63.36	75.01	80.58	82.29	82.31	53.25	66.21	78.44	84.04	83.94	83.96	55.16	69.03	81.62	85.34	85.41	85.43
	kW	37.08	36.61	36.15	35.77	35.68	35.68	37.19	36.72	36.26	35.92	35.89	35.89	37.28	36.80	36.36	36.12	36.08	36.08	37.35	36.88	36.43	36.24	36.23	36.23	37.42	36.94	36.51	36.37	36.37	36.38

Legend
OAT Outdoor entering air temperature, condenser, °C
TC Total gross cooling capacity, kW
SC Sensible gross cooling capacity, kW
kW Compressor power input, kW

Cooling capacities (continued)

48/50UA 120

48/50UA120 - Standard unit - cooling mode

OAT, °C		Evaporator air volume - l/s (m³/h)																													
		4440 (16000)						4995 (18000)						5550 (20000)						6105 (22000)						6660 (24000)					
		Indoor entering air wet bulb temperature, evaporator, °C																													
		23	21	19	17	15	13	23	21	19	17	15	13	23	21	19	17	15	13	23	21	19	17	15	13	23	21	19	17	15	13
10	TC	152.17	143.58	135.43	127.76	121.66	118.76	154.49	146.04	137.89	130.45	125.03	123.05	156.41	147.99	139.77	132.66	128.37	126.74	158.04	149.73	141.33	134.73	130.87	130.01	164.96	151.07	142.85	136.70	132.92	132.89
	SC	69.33	81.22	92.96	104.39	115.04	118.76	71.76	84.80	97.75	110.23	120.99	123.05	74.09	88.26	102.33	115.82	124.97	126.74	76.37	91.68	106.76	120.95	128.51	130.01	80.44	95.00	111.03	125.83	132.72	132.89
	kW	28.13	27.17	26.28	25.45	24.82	24.53	28.41	27.46	26.56	25.76	25.19	24.99	28.64	27.69	26.78	26.01	25.56	25.40	28.84	27.90	26.96	26.25	25.85	25.75	25.89	28.07	27.15	26.48	26.08	26.08
15	TC	145.94	137.80	130.02	122.71	116.90	114.94	148.07	140.06	132.24	125.24	120.56	118.98	149.84	141.88	133.95	127.23	124.13	122.52	151.36	143.39	135.44	129.32	126.43	125.58	158.36	144.67	136.93	131.13	128.31	128.24
	SC	67.16	78.95	90.64	101.97	112.15	114.94	69.56	82.52	95.39	107.78	117.36	118.98	71.87	85.97	99.94	113.21	120.38	122.52	74.14	89.36	104.29	118.23	123.96	125.58	78.26	92.70	108.57	123.04	128.12	128.24
	kW	30.82	29.83	28.91	28.06	27.40	27.19	31.09	30.12	29.19	28.37	27.84	27.67	31.33	30.36	29.41	28.62	28.27	28.09	31.53	30.56	29.60	28.89	28.56	28.46	28.39	30.73	29.80	29.12	28.79	28.79
25	TC	132.66	125.49	118.52	112.13	107.88	106.71	134.48	127.31	120.18	114.12	111.27	110.28	135.96	128.81	121.72	116.12	114.22	113.34	137.19	130.01	123.13	117.76	115.95	115.97	144.01	131.03	124.34	119.50	118.26	118.29
	SC	62.55	74.20	85.79	96.94	105.40	106.71	64.92	77.72	90.41	102.47	108.37	110.28	67.21	81.16	94.83	107.55	111.67	113.34	69.45	84.51	99.16	112.30	115.95	115.97	73.55	87.83	103.39	115.95	118.26	118.29
	kW	36.66	35.66	34.70	33.83	33.26	33.12	36.93	35.93	34.94	34.12	33.74	33.62	37.16	36.16	35.17	34.42	34.17	34.05	37.35	36.35	35.39	34.67	34.43	34.43	33.91	36.51	35.58	34.93	34.77	34.77
30	TC	135.27	127.28	116.14	109.72	103.41	102.33	137.41	129.36	121.54	111.84	108.24	108.21	139.11	131.06	123.26	113.80	111.26	111.25	140.57	132.49	124.81	115.54	113.99	113.91	141.82	133.67	126.15	120.74	119.30	119.32
	SC	63.45	74.89	84.81	95.80	100.84	102.33	65.91	78.49	90.98	101.31	108.10	108.21	68.27	81.98	95.48	106.35	111.18	111.25	70.57	85.41	99.85	110.85	113.99	113.91	72.85	88.78	104.13	116.90	119.30	119.32
	kW	32.65	32.05	34.65	33.97	36.51	36.37	32.83	32.22	31.63	34.21	33.86	33.85	32.97	32.36	31.77	34.44	34.19	34.19	33.09	32.48	31.90	34.65	34.50	34.49	33.19	32.58	32.01	31.61	31.51	31.51
35	TC	128.08	120.56	113.34	106.93	103.49	102.36	129.96	122.43	115.01	109.14	105.92	105.89	131.52	123.91	116.67	111.06	108.89	108.90	132.78	125.15	118.09	112.76	111.52	111.54	133.87	126.23	119.24	114.91	113.86	113.88
	SC	60.97	72.33	83.64	94.48	100.91	102.36	63.39	75.92	88.25	99.94	105.78	105.89	65.74	79.38	92.73	104.94	108.89	108.90	68.01	82.79	97.09	109.23	111.52	111.54	70.27	86.15	101.30	112.26	113.86	113.88
	kW	35.80	35.19	34.61	34.10	33.83	33.75	35.96	35.35	34.75	34.29	34.04	34.04	36.10	35.48	34.90	34.46	34.29	34.29	36.21	35.59	35.03	34.61	34.51	34.51	36.31	35.69	35.13	34.79	34.71	34.71
40	TC	120.51	113.52	106.64	100.90	98.81	97.62	122.16	115.11	108.35	102.97	100.81	100.82	123.48	116.42	109.80	104.70	103.55	103.57	124.60	117.48	111.02	106.79	105.95	105.97	125.53	118.29	111.95	108.24	108.07	108.08
	SC	58.37	69.68	80.86	91.53	95.86	97.62	60.77	73.22	85.45	96.78	100.81	100.82	63.08	76.68	89.89	101.42	103.55	103.57	65.35	80.05	94.19	104.51	105.95	105.97	67.59	83.36	98.26	107.17	108.07	108.08
	kW	39.15	38.54	37.94	37.45	37.27	37.18	39.30	38.69	38.10	37.65	37.47	37.47	39.43	38.82	38.25	37.81	37.72	37.72	39.53	38.92	38.37	38.00	37.94	37.94	39.63	39.00	38.46	38.14	38.13	38.14
45	TC	112.54	106.06	99.76	94.71	92.48	92.49	113.96	107.43	101.30	96.46	95.37	95.39	115.08	108.52	102.56	98.63	97.86	97.88	116.00	109.32	103.49	100.41	100.02	100.04	116.79	109.98	104.55	102.43	101.90	101.92
	SC	55.67	66.91	77.97	88.41	92.48	92.49	58.03	70.43	82.53	93.35	95.37	95.39	60.33	73.86	86.92	96.66	97.86	97.88	62.57	77.18	91.05	99.16	100.02	100.04	64.80	80.39	94.82	100.95	101.90	101.92
	kW	42.66	42.07	41.49	41.04	40.84	40.84	42.80	42.21	41.65	41.21	41.12	41.12	42.92	42.32	41.78	41.43	41.36	41.36	43.01	42.41	41.88	41.60	41.57	41.58	43.10	42.48	42.00	41.80	41.76	41.76
48	TC	107.58	101.41	95.36	90.83	89.23	89.25	108.84	102.63	96.76	92.69	91.96	91.97	109.84	103.63	97.97	94.42	94.27	94.29	110.68	104.27	99.00	113.41	96.27	96.29	111.38	104.96	99.98	98.03	98.01	98.03
	SC	54.00	65.20	76.13	86.39	89.23	89.25	56.34	68.71	80.67	90.65	91.96	91.97	58.63	72.12	85.02	93.96	94.27	94.29	60.87	75.38	89.01	113.41	96.27	96.29	63.09	78.54	92.66	97.87	98.01	98.03
	kW	44.84	44.26	43.68	43.26	43.11	43.11	44.97	44.39	43.83	43.45	43.38	43.39	45.07	44.49	43.96	43.64	43.62	43.62	45.16	44.56	44.08	45.82	43.83	43.83	45.24	44.64	44.19	44.01	44.01	44.01

Legend
OAT Outdoor entering air temperature, condenser, °C
TC Total gross cooling capacity, kW
SC Sensible gross cooling capacity, kW
kW Compressor power input, kW

Cooling capacities (continued)

48/50UH 045

48/50UH 045 - Standard unit - cooling mode

OAT, °C		Evaporator air volume - l/s (m³/h)																													
		2022 (7300)						2275 (8200)						2528 (9100)						2781 (10000)						3034 (10900)					
		Indoor entering air wet bulb temperature, evaporator, °C																													
		23	21	19	17	15	13	23	21	19	17	15	13	23	21	19	17	15	13	23	21	19	17	15	13	23	21	19	17	15	13
10	TC	58.67	55.24	51.99	48.85	45.96	44.96	59.62	56.20	52.93	49.74	47.43	46.59	60.43	57.00	53.71	50.51	48.81	48.02	61.08	57.67	54.36	51.28	50.15	49.28	61.65	58.24	54.92	51.90	51.33	50.40
	SC	26.36	30.98	35.51	40.00	43.64	44.96	27.31	32.33	37.32	42.14	45.68	46.59	28.22	33.64	39.03	44.12	46.98	48.02	29.08	34.89	40.70	46.05	47.97	49.28	29.87	36.09	42.30	47.86	48.70	50.40
	kW	9.84	9.52	9.23	8.94	8.68	8.60	9.93	9.61	9.31	9.02	8.81	8.75	10.02	9.69	9.39	9.09	8.94	8.88	10.08	9.76	9.45	9.17	9.07	9.00	10.14	9.82	9.51	9.23	9.18	9.11
15	TC	56.08	52.83	49.66	46.60	44.16	43.33	56.99	53.69	50.55	47.41	45.57	44.87	57.73	54.43	51.29	48.24	47.01	46.22	58.34	55.05	51.89	48.90	48.77	47.40	58.86	55.55	52.32	49.55	48.77	48.45
	SC	25.50	30.07	34.56	38.98	42.45	43.33	26.45	31.41	36.35	41.07	44.02	44.87	27.35	32.70	38.07	43.07	45.09	46.22	28.17	33.94	39.73	44.95	48.11	47.40	28.99	35.16	41.28	46.64	48.11	48.45
	kW	10.80	10.48	10.16	9.84	9.61	9.54	10.90	10.56	10.25	9.93	9.75	9.70	10.98	10.64	10.33	10.02	9.90	9.83	11.04	10.71	10.39	10.09	10.09	9.96	11.10	10.76	10.43	10.16	10.09	10.07
25	TC	50.64	47.66	44.80	41.99	40.50	39.91	51.39	48.39	45.51	42.84	41.48	41.25	51.99	48.98	46.09	43.45	42.47	42.41	52.43	49.47	46.53	44.15	43.42	43.43	52.83	49.86	46.85	44.92	44.33	44.34
	SC	23.72	28.15	32.60	36.81	39.14	39.91	24.61	29.50	34.37	38.89	41.04	41.25	25.47	30.77	36.08	40.66	42.28	42.41	26.29	32.00	37.68	42.30	43.42	43.43	27.08	33.19	39.18	43.46	44.33	44.34
	kW	12.92	12.57	12.23	11.89	11.72	11.67	13.01	12.66	12.32	12.00	11.85	11.83	13.09	12.73	12.39	12.08	11.98	11.98	13.14	12.80	12.44	12.17	12.10	12.10	13.19	12.85	12.49	12.27	12.21	12.22
30	TC	51.26	48.08	45.03	42.06	40.50	39.86	52.11	48.86	45.80	42.95	41.33	41.25	52.77	49.52	46.44	43.65	42.53	42.46	53.32	50.06	46.94	44.34	43.52	43.53	53.79	50.51	47.29	45.15	44.49	44.50
	SC	23.91	28.31	32.69	36.86	39.14	39.86	24.84	29.67	34.49	38.95	41.13	41.25	25.73	30.96	36.21	40.85	42.35	42.46	26.57	32.21	37.84	42.45	43.52	43.53	27.38	33.41	39.35	43.65	44.49	44.50
	kW	11.82	11.60	11.38	11.16	11.05	11.02	11.88	11.65	11.43	11.23	11.13	11.12	11.93	11.70	11.48	11.29	11.22	11.21	11.97	11.74	11.52	11.34	11.30	11.30	12.01	11.77	11.54	11.40	11.37	11.37
35	TC	48.36	45.35	42.46	39.76	38.75	38.05	49.07	46.05	43.14	40.49	39.37	39.33	49.65	46.61	43.69	41.20	40.45	40.45	50.14	47.08	44.09	42.01	41.44	41.45	50.54	47.45	44.49	42.86	42.33	42.33
	SC	22.95	27.32	31.68	35.76	37.22	38.05	23.85	28.65	33.45	37.76	39.24	39.33	24.72	29.93	35.16	39.46	40.45	40.45	25.56	31.16	36.71	40.73	41.44	41.45	26.36	32.36	38.20	41.57	42.33	42.33
	kW	12.96	12.73	12.51	12.30	12.22	12.18	13.01	12.79	12.57	12.36	12.29	12.29	13.06	12.84	12.61	12.42	12.38	12.38	13.10	12.88	12.64	12.49	12.46	12.46	13.14	12.90	12.68	12.56	12.53	12.53
40	TC	45.40	42.56	39.83	37.33	36.54	36.17	45.99	43.17	40.43	38.02	37.34	37.35	46.51	43.65	40.86	38.88	38.37	38.38	46.94	44.05	41.25	39.74	39.28	39.29	47.25	44.38	41.68	40.89	40.08	40.09
	SC	21.97	26.31	30.65	34.61	36.47	36.17	22.85	27.64	32.41	36.41	37.34	37.35	23.72	28.90	34.03	37.75	38.37	38.38	24.54	30.12	35.54	38.58	39.28	39.29	25.34	31.31	37.02	39.12	40.08	40.09
	kW	14.19	13.96	13.74	13.53	13.46	13.45	14.25	14.01	13.79	13.59	13.56	13.56	14.30	14.06	13.82	13.67	13.64	13.65	14.33	14.10	13.86	13.74	13.72	13.72	14.35	14.13	13.90	13.83	13.79	13.79
45	TC	42.28	39.63	37.12	34.87	34.21	34.22	42.81	40.16	37.57	35.73	35.29	35.30	43.26	40.58	37.99	36.62	36.22	36.23	43.62	40.93	38.45	37.16	37.05	37.05	43.92	41.23	38.80	37.99	37.77	37.78
	SC	20.95	25.25	29.58	33.33	34.21	34.22	21.83	26.57	31.26	34.73	35.29	35.30	22.69	27.83	32.83	35.59	36.22	36.23	23.51	29.05	34.36	36.80	37.05	37.05	24.31	30.25	35.77	37.50	37.77	37.78
	kW	15.48	15.25	15.04	14.84	14.81	14.81	15.53	15.30	15.07	14.92	14.90	14.91	15.57	15.34	15.11	15.00	14.99	14.99	15.60	15.37	15.15	15.07	15.06	15.06	15.63	15.40	15.19	15.13	15.13	15.13
48	TC	40.37	37.86	35.46	33.49	33.00	33.01	40.87	38.33	35.82	34.37	34.02	34.03	41.26	38.71	36.30	35.31	34.90	34.91	41.59	39.03	36.68	35.85	35.67	35.67	41.87	39.31	36.99	36.54	36.35	36.36
	SC	20.33	24.62	28.93	32.38	33.00	33.01	21.21	25.93	30.54	33.52	34.02	34.03	22.06	27.19	32.10	34.23	34.90	34.91	22.88	28.41	33.57	34.87	35.67	35.67	23.68	29.61	34.83	36.49	36.35	36.36
	kW	16.27	16.05	15.83	15.66	15.64	15.64	16.31	16.09	15.86	15.74	15.73	15.73	16.35	16.13	15.91	15.83	15.81	15.81	16.38	16.16	15.95	15.89	15.88	15.88	16.41	16.19	15.99	15.95	15.94	15.95

Legend
OAT Outdoor entering air temperature, condenser, °C
TC Total gross cooling capacity, kW
SC Sensible gross cooling capacity, kW
kW Compressor power input, kW

Cooling capacities (continued)

48/50UH 055

48/50UH 055 - Standard unit - cooling mode

OAT, °C		Evaporator air volume - l/s (m³/h)																													
		2755 (10000)						3100 (11200)						3444 (12400)						3788 (13600)						4133 (14900)					
		Indoor entering air wet bulb temperature, evaporator, °C																													
		23	21	19	17	15	13	23	21	19	17	15	13	23	21	19	17	15	13	23	21	19	17	15	13	23	21	19	17	15	13
10	TC	69.28	65.18	61.29	57.49	54.77	53.61	70.32	66.23	62.33	58.52	56.44	55.43	71.22	67.12	63.21	59.43	57.04	57.01	71.96	67.83	63.86	60.33	59.67	58.40	72.60	68.47	64.42	60.89	60.68	59.64
	SC	31.30	37.01	42.65	48.17	52.23	53.61	32.43	38.64	44.81	50.67	53.98	55.43	33.54	40.22	46.91	52.97	56.91	57.01	34.56	41.71	48.87	55.19	56.29	58.40	35.57	43.19	50.78	57.02	56.99	59.64
	kW	11.97	11.62	11.29	10.95	10.73	10.64	12.07	11.71	11.38	11.05	10.88	10.80	12.15	11.79	11.46	11.13	10.94	10.94	12.22	11.86	11.52	11.22	11.16	11.07	12.29	11.92	11.57	11.28	11.26	11.18
15	TC	66.04	62.17	58.43	54.72	52.49	51.60	67.00	63.13	59.36	55.84	54.32	53.31	67.79	63.86	60.12	56.68	54.91	54.79	68.46	64.53	60.73	57.42	57.31	56.09	69.06	65.09	61.15	58.17	57.54	57.24
	SC	30.27	35.93	41.53	46.92	50.42	51.60	31.38	37.55	43.68	49.40	51.78	53.31	32.44	39.07	45.72	51.68	54.53	54.79	33.46	40.57	47.67	53.71	53.93	56.09	34.46	42.05	49.54	55.30	56.84	57.24
	kW	13.07	12.71	12.35	11.99	11.79	11.72	13.16	12.80	12.44	12.10	11.96	11.88	13.24	12.87	12.52	12.19	12.04	12.03	13.31	12.94	12.59	12.27	12.26	12.16	13.38	13.00	12.63	12.35	12.30	12.27
25	TC	59.49	56.01	52.63	49.41	48.38	47.49	60.27	56.75	53.38	50.32	49.10	48.97	60.89	57.39	53.90	51.15	50.10	50.24	61.36	57.91	54.29	52.09	51.33	51.35	61.82	58.34	54.86	52.28	52.32	52.33
	SC	28.19	33.76	39.32	44.41	46.07	47.49	29.27	35.35	41.46	46.75	48.67	48.97	30.30	36.88	43.40	48.64	50.10	50.24	31.25	38.33	45.24	50.06	51.33	51.35	32.26	39.80	47.01	52.28	52.32	52.33
	kW	15.54	15.14	14.76	14.40	14.29	14.20	15.64	15.24	14.85	14.51	14.39	14.38	15.71	15.32	14.92	14.61	14.52	14.53	15.76	15.38	14.96	14.73	14.66	14.66	15.82	15.44	15.04	14.77	14.78	14.78
30	TC	60.26	56.53	52.92	49.58	47.48	47.46	61.13	57.35	53.72	50.47	49.13	49.00	61.84	58.02	54.33	51.34	50.17	50.33	62.43	58.60	54.79	52.41	51.53	51.50	62.96	59.08	55.32	52.50	52.53	52.55
	SC	28.43	33.94	39.43	44.48	47.37	47.46	29.54	35.56	41.59	46.84	48.74	49.00	30.60	37.09	43.56	48.77	50.17	50.33	31.59	38.57	45.43	50.24	51.42	51.50	32.61	40.05	47.22	52.50	52.53	52.55
	kW	14.32	14.08	13.82	13.59	13.46	13.46	14.38	14.13	13.88	13.66	13.58	13.57	14.44	14.17	13.93	13.73	13.66	13.67	14.48	14.22	13.96	13.80	13.76	13.76	14.52	14.25	14.00	13.83	13.83	13.83
35	TC	56.85	53.29	49.92	46.81	45.39	45.32	57.55	54.03	50.62	47.68	46.65	46.75	58.18	54.63	51.09	48.70	47.96	47.96	58.70	55.14	51.60	49.67	49.03	49.03	59.15	55.59	52.05	49.97	49.97	49.99
	SC	27.33	32.82	38.29	43.17	45.14	45.32	28.41	34.39	40.40	45.29	46.65	46.75	29.45	35.94	42.31	46.84	47.96	47.96	30.46	37.43	44.11	47.94	49.03	49.03	31.44	38.90	45.83	49.97	49.97	49.99
	kW	15.68	15.42	15.17	14.94	14.85	14.84	15.73	15.48	15.22	15.01	14.95	14.96	15.78	15.53	15.26	15.09	15.05	15.05	15.82	15.57	15.30	15.17	15.13	15.14	15.86	15.60	15.34	15.21	15.21	15.21
40	TC	53.32	50.03	46.87	44.02	43.22	43.12	53.97	50.65	47.41	45.07	44.42	44.43	54.50	51.18	47.91	46.12	45.54	45.55	54.90	51.62	48.36	47.34	46.51	46.52	55.29	51.99	48.86	47.36	47.38	47.40
	SC	26.20	31.67	37.12	41.74	42.97	43.12	27.29	33.25	39.16	43.43	44.42	44.43	28.32	34.78	41.02	44.56	45.54	45.55	29.29	36.27	42.77	45.28	46.51	46.52	30.27	37.72	44.47	47.36	47.38	47.40
	kW	17.18	16.92	16.66	16.44	16.40	16.39	17.23	16.97	16.70	16.53	16.50	16.50	17.28	17.02	16.75	16.62	16.59	16.59	17.30	17.05	16.79	16.71	16.67	16.67	17.33	17.09	16.84	16.74	16.75	16.75
45	TC	49.73	46.72	43.73	41.51	40.90	40.90	50.30	47.25	44.25	42.58	42.08	42.09	50.75	47.69	44.76	43.94	43.08	43.09	51.13	48.06	45.21	44.62	43.95	43.96	51.45	48.38	45.57	44.73	44.73	44.74
	SC	25.08	30.53	35.92	40.00	40.90	40.90	26.14	32.10	37.87	41.21	42.08	42.09	27.16	33.62	39.70	41.89	43.08	43.09	28.15	35.09	41.41	42.70	43.95	43.96	29.11	36.55	42.93	44.62	44.73	44.74
	kW	18.75	18.50	18.25	18.09	18.06	18.06	18.80	18.55	18.30	18.18	18.16	18.16	18.84	18.59	18.35	18.28	18.24	18.25	18.87	18.62	18.39	18.34	18.32	18.32	18.90	18.65	18.43	18.39	18.39	18.39
48	TC	47.56	44.72	41.85	39.96	39.52	39.53	48.06	45.18	42.42	41.13	40.62	40.63	48.46	45.58	42.86	42.18	41.55	41.57	48.81	45.90	43.24	43.01	42.37	42.38	49.10	46.17	43.67	43.09	43.09	43.10
	SC	24.39	29.85	35.17	38.82	39.52	39.53	25.45	31.40	37.10	39.72	40.62	40.63	26.46	32.92	38.89	40.42	41.55	41.57	27.44	34.39	40.50	41.08	42.37	42.38	28.40	35.83	41.84	42.98	43.09	43.10
	kW	19.74	19.51	19.27	19.13	19.13	19.13	19.79	19.55	19.32	19.23	19.22	19.22	19.82	19.59	19.37	19.31	19.29	19.29	19.85	19.62	19.40	19.38	19.36	19.36	19.87	19.64	19.44	19.42	19.42	19.42

Legend
OAT Outdoor entering air temperature, condenser, °C
TC Total gross cooling capacity, kW
SC Sensible gross cooling capacity, kW
kW Compressor power input, kW

Cooling capacities (continued)

48/50UH 065

48/50UH 065 - Standard unit - cooling mode

OAT, °C		Evaporator air volume - l/s (m³/h)																													
		2778 (10000)						3124 (11250)						3472 (12500)						3819 (13750)						4166 (15000)					
		Indoor entering air wet bulb temperature, evaporator, °C																													
		23	21	19	17	15	13	23	21	19	17	15	13	23	21	19	17	15	13	23	21	19	17	15	13	23	21	19	17	15	13
10	TC	80.45	75.63	71.08	66.73	63.37	62.10	81.76	76.97	72.37	68.15	65.37	64.30	82.90	78.08	73.43	69.26	66.93	66.22	83.84	79.00	74.24	70.32	68.47	67.92	84.64	79.79	74.98	71.26	69.44	69.42
	SC	36.61	43.01	49.34	55.43	60.64	62.10	37.94	44.93	51.88	58.51	63.20	64.30	39.23	46.81	54.37	61.38	65.51	66.22	40.46	48.63	56.69	63.98	66.85	67.92	41.67	50.41	58.93	66.43	69.31	69.42
	kW	11.84	11.52	11.23	10.94	10.74	10.67	11.93	11.61	11.31	11.04	10.87	10.81	12.01	11.69	11.38	11.12	10.98	10.94	12.07	11.75	11.44	11.19	11.08	11.05	12.13	11.81	11.49	11.26	11.15	11.15
15	TC	77.17	72.54	68.15	64.01	60.99	60.01	78.43	73.77	69.33	65.34	63.14	62.10	79.45	74.79	70.26	66.35	64.53	63.92	80.31	75.64	70.98	67.41	66.08	65.53	81.06	76.38	71.80	68.28	66.98	66.94
	SC	35.51	41.83	48.12	54.15	58.94	60.01	36.82	43.76	50.67	57.20	60.91	62.10	38.10	45.63	53.12	59.94	63.20	63.92	39.32	47.43	55.39	62.49	64.26	65.53	40.52	49.21	57.63	64.84	66.78	66.94
	kW	13.12	12.79	12.47	12.18	11.98	11.93	13.21	12.88	12.56	12.28	12.14	12.08	13.29	12.95	12.63	12.36	12.24	12.21	13.36	13.02	12.68	12.44	12.36	12.32	13.41	13.08	12.75	12.51	12.43	12.43
25	TC	70.07	65.92	61.91	58.28	56.67	55.57	71.10	66.92	62.79	59.36	57.93	57.42	71.93	67.76	63.60	60.37	59.19	59.03	72.63	68.44	64.37	61.32	60.43	60.42	73.20	69.00	65.04	62.39	61.65	61.66
	SC	33.11	39.38	45.62	51.48	54.34	55.57	34.40	41.28	48.08	54.27	56.68	57.42	35.65	43.13	50.43	56.87	58.69	59.03	36.84	44.91	52.69	59.07	60.35	60.42	38.01	46.66	54.90	60.61	61.65	61.66
	kW	15.98	15.63	15.30	15.00	14.87	14.80	16.08	15.72	15.37	15.09	14.99	14.96	16.15	15.80	15.44	15.19	15.10	15.09	16.22	15.86	15.51	15.27	15.21	15.21	16.27	15.91	15.58	15.37	15.32	15.32
30	TC	68.43	64.26	60.24	55.18	53.70	53.22	69.44	65.24	61.09	57.76	54.96	54.95	70.26	66.05	61.93	58.73	57.65	57.64	70.92	66.71	62.69	59.81	59.00	59.01	71.48	67.26	63.29	60.59	60.23	60.24
	SC	32.56	38.77	44.95	50.00	53.70	53.22	33.86	40.67	47.38	53.47	54.88	54.95	35.10	42.52	49.74	55.99	57.58	57.64	36.30	44.30	52.01	57.91	59.00	59.01	37.47	46.05	54.19	59.67	60.23	60.24
	kW	16.35	16.05	15.76	16.56	16.48	16.41	16.42	16.12	15.82	15.60	16.57	16.57	16.48	16.18	15.88	15.67	15.62	15.62	16.54	16.23	15.94	15.76	15.72	15.72	16.58	16.28	15.99	15.82	15.81	15.81
35	TC	66.29	62.16	58.21	54.65	53.17	52.69	67.24	63.10	59.02	55.85	54.47	54.45	68.02	63.83	59.86	56.80	55.98	55.98	68.66	64.45	60.59	58.03	57.31	57.31	69.21	64.98	61.10	59.01	58.49	58.50
	SC	31.85	38.00	44.14	49.73	52.10	52.69	33.14	39.91	46.54	52.50	54.38	54.45	34.38	41.74	48.90	54.80	55.98	55.98	35.58	43.52	51.16	56.44	57.31	57.31	36.75	45.27	53.31	57.85	58.49	58.50
	kW	16.85	16.60	16.37	16.17	16.10	16.08	16.91	16.66	16.42	16.25	16.19	16.19	16.95	16.71	16.47	16.31	16.28	16.28	17.00	16.75	16.52	16.38	16.36	16.36	17.03	16.78	16.55	16.45	16.43	16.43
40	TC	62.39	58.49	54.68	51.59	50.31	50.21	63.22	59.31	55.56	52.59	51.83	51.84	63.88	59.98	56.31	53.80	53.23	53.24	64.44	60.53	56.85	54.72	54.45	54.46	64.93	60.95	57.39	55.73	55.54	55.55
	SC	30.55	36.67	42.71	48.19	50.31	50.21	31.82	38.56	45.12	50.68	51.83	51.84	33.05	40.39	47.45	52.42	53.23	53.24	34.24	42.17	49.65	53.96	54.45	54.46	35.41	43.89	51.68	54.87	55.54	55.55
	kW	18.57	18.32	18.08	17.90	17.84	17.83	18.63	18.38	18.14	17.96	17.94	17.94	18.67	18.42	18.19	18.05	18.03	18.03	18.71	18.46	18.23	18.12	18.11	18.11	18.74	18.49	18.27	18.19	18.18	18.18
45	TC	58.26	54.66	51.17	48.40	47.61	47.62	59.00	55.36	51.97	49.55	49.09	49.10	59.60	55.93	52.56	50.36	50.36	50.37	60.10	56.40	53.10	51.64	51.46	51.48	60.52	56.70	53.66	52.78	52.45	52.46
	SC	29.19	35.29	41.26	46.47	47.61	47.62	30.46	37.16	43.66	48.37	49.09	49.10	31.69	38.98	45.94	50.32	50.36	50.37	32.88	40.75	48.01	50.95	51.46	51.48	34.05	42.43	49.93	51.29	52.45	52.46
	kW	20.40	20.16	19.92	19.74	19.71	19.71	20.45	20.21	19.98	19.83	19.81	19.82	20.49	20.25	20.03	19.90	19.90	19.91	20.53	20.29	20.06	19.99	19.98	19.98	20.56	20.30	20.11	20.07	20.05	20.05
48	TC	55.80	52.34	49.02	46.50	45.99	46.00	56.47	52.97	49.75	47.56	47.37	47.38	57.02	53.50	50.24	48.57	48.57	48.58	57.47	53.87	50.83	49.54	49.61	49.62	57.86	54.14	51.38	50.46	50.52	50.53
	SC	28.39	34.46	40.37	45.23	45.99	46.00	29.65	36.32	42.75	46.97	47.37	47.38	30.87	38.14	44.95	48.52	48.57	48.58	32.06	39.88	46.94	49.54	49.61	49.62	33.23	41.53	48.78	50.46	50.52	50.53
	kW	21.54	21.30	21.06	20.90	20.88	20.88	21.58	21.34	21.12	20.99	20.98	20.98	21.62	21.38	21.16	21.07	21.07	21.07	21.66	21.41	21.21	21.14	21.15	21.15	21.69	21.43	21.25	21.19	21.21	21.21

Legend
OAT Outdoor entering air temperature, condenser, °C
TC Total gross cooling capacity, kW
SC Sensible gross cooling capacity, kW
kW Compressor power input, kW

Cooling capacities (continued)

48/50UH 075

48/50UH 075 - Standard unit - cooling mode

OAT, °C		Evaporator air volume - l/s (m³/h)																													
		3155 (11400)						3550 (12800)						3944 (14200)						4388 (15800)						4733 (17000)					
		Indoor entering air wet bulb temperature, evaporator, °C																													
		23	21	19	17	15	13	23	21	19	17	15	13	23	21	19	17	15	13	23	21	19	17	15	13	23	21	19	17	15	13
10	TC	92.84	87.54	82.48	77.61	73.80	72.10	94.33	89.07	83.98	79.23	75.83	74.52	95.56	90.30	85.21	80.51	77.96	76.69	96.60	91.33	86.10	81.71	78.62	78.61	97.38	92.20	86.93	82.85	80.31	80.31
	SC	42.03	49.43	56.69	63.67	69.81	72.10	43.56	51.60	59.59	67.14	73.00	74.52	44.99	53.70	62.38	70.41	75.19	76.69	46.38	55.77	65.03	73.39	78.49	78.61	47.72	57.78	67.55	76.15	80.18	80.31
	kW	15.22	14.81	14.42	14.05	13.78	13.67	15.35	14.93	14.54	14.18	13.94	13.86	15.45	15.03	14.64	14.28	14.10	14.02	15.54	15.12	14.71	14.38	14.17	14.17	15.61	15.20	14.78	14.48	14.30	14.30
15	TC	89.33	84.27	79.39	74.76	71.22	69.81	90.74	85.66	80.78	76.28	73.44	72.20	91.86	86.79	81.81	77.43	74.29	74.28	92.75	87.69	82.64	78.67	76.10	76.09	93.52	88.44	83.55	79.70	77.71	77.70
	SC	40.85	48.17	55.40	62.32	68.19	69.81	42.36	50.34	58.29	65.76	70.96	72.20	43.76	52.43	61.03	68.91	74.15	74.28	45.13	54.46	63.63	71.83	75.98	76.09	46.48	56.45	66.16	74.55	77.58	77.70
	kW	17.07	16.64	16.23	15.84	15.57	15.47	17.20	16.76	16.35	15.98	15.76	15.67	17.30	16.86	16.44	16.08	15.85	15.85	17.39	16.95	16.51	16.19	16.00	16.00	17.46	17.02	16.60	16.29	16.14	16.14
25	TC	81.60	76.97	72.55	68.54	65.89	65.01	82.65	78.05	73.52	69.72	67.76	67.13	83.54	78.95	74.40	70.94	68.96	68.94	84.33	79.71	75.26	71.86	70.54	70.53	84.99	80.35	76.02	72.92	71.94	71.93
	SC	38.24	45.44	52.62	59.40	63.96	65.01	39.67	47.55	55.38	62.60	66.39	67.13	41.04	49.60	58.01	65.59	68.85	68.94	42.42	51.64	60.57	68.28	70.41	70.53	43.77	53.63	63.07	70.33	71.81	71.93
	kW	21.14	20.68	20.23	19.84	19.59	19.53	21.26	20.79	20.33	19.96	19.79	19.74	21.36	20.89	20.42	20.09	19.93	19.93	21.44	20.98	20.52	20.20	20.10	20.09	21.52	21.05	20.61	20.31	20.24	20.24
30	TC	82.06	77.11	70.77	66.80	62.87	62.39	83.21	78.27	71.73	68.06	66.86	65.69	84.19	79.24	74.40	69.23	67.49	67.48	85.05	80.08	75.33	70.22	69.07	69.04	85.79	80.79	76.14	71.34	70.42	70.44
	SC	38.40	45.49	51.89	58.57	61.73	62.39	39.85	47.63	54.66	61.75	63.85	65.69	41.26	49.71	58.01	64.69	67.38	67.48	42.66	51.77	60.60	67.21	68.90	69.04	44.03	53.79	63.12	69.06	70.42	70.44
	kW	19.62	19.35	20.68	20.36	21.79	21.77	19.69	19.42	20.75	20.47	20.37	20.32	19.75	19.47	19.20	20.57	20.47	20.47	19.80	19.52	19.26	20.66	20.60	20.59	19.84	19.57	19.31	20.76	20.71	20.71
35	TC	77.76	73.09	68.68	64.75	63.04	61.98	78.86	74.20	69.60	66.06	64.67	64.01	79.79	75.08	70.53	67.16	65.79	65.77	80.57	75.85	71.38	68.26	67.31	67.29	81.25	76.50	72.14	69.29	68.65	68.66
	SC	36.96	44.00	51.04	57.59	60.91	61.98	38.42	46.16	53.78	60.74	63.26	64.01	39.83	48.23	56.41	63.61	65.67	65.77	41.23	50.29	58.99	65.91	67.20	67.29	42.59	52.31	61.51	67.47	68.65	68.66
	kW	21.82	21.54	21.27	21.03	20.94	20.90	21.88	21.61	21.32	21.12	21.05	21.03	21.94	21.66	21.39	21.19	21.14	21.14	21.99	21.71	21.45	21.27	21.23	21.23	22.04	21.76	21.49	21.34	21.31	21.31
40	TC	73.39	69.01	64.72	61.22	59.19	59.16	74.39	69.98	65.69	62.46	61.07	61.05	75.21	70.77	66.56	63.52	62.69	62.67	75.91	71.44	67.34	64.63	64.07	64.08	76.49	72.00	67.82	65.93	65.32	65.34
	SC	35.51	42.50	49.43	55.84	59.10	59.16	36.96	44.64	52.15	58.90	60.97	61.05	38.36	46.71	54.77	61.36	62.59	62.67	39.74	48.76	57.34	63.11	64.07	64.08	41.09	50.76	59.69	64.03	65.32	65.34
	kW	24.15	23.87	23.58	23.36	23.26	23.26	24.22	23.93	23.65	23.45	23.39	23.39	24.27	23.99	23.71	23.53	23.50	23.50	24.32	24.03	23.77	23.61	23.59	23.59	24.36	24.07	23.81	23.69	23.67	23.68
45	TC	68.82	64.71	60.68	57.56	56.21	56.19	69.71	65.56	61.63	58.66	57.90	57.91	70.41	66.24	62.39	59.97	59.38	59.39	71.02	66.83	62.94	61.21	60.68	60.68	71.54	67.19	63.56	62.43	61.81	61.82
	SC	34.00	40.95	47.76	53.96	56.12	56.19	35.44	43.08	50.47	56.69	57.90	57.91	36.82	45.14	53.07	58.53	59.38	59.39	38.20	47.18	55.51	59.48	60.68	60.68	39.55	49.11	57.67	60.45	61.81	61.82
	kW	26.58	26.30	26.02	25.82	25.75	25.75	26.64	26.36	26.09	25.90	25.87	25.87	26.69	26.41	26.15	26.00	25.98	25.98	26.73	26.45	26.19	26.08	26.07	26.07	26.77	26.48	26.24	26.16	26.15	26.15
48	TC	65.98	62.05	58.24	55.30	54.32	54.31	66.78	62.82	59.11	56.54	55.93	55.94	67.43	63.44	59.75	57.61	57.32	57.33	67.99	63.89	60.33	58.75	58.54	58.55	68.45	64.22	60.97	59.83	59.61	59.62
	SC	33.07	39.99	46.75	52.76	54.28	54.31	34.50	42.11	49.45	55.02	55.93	55.94	35.88	44.17	52.00	56.81	57.32	57.33	37.25	46.18	54.28	57.95	58.54	58.55	38.59	48.07	56.43	58.92	59.61	59.62
	kW	28.06	27.78	27.51	27.31	27.26	27.27	28.12	27.84	27.58	27.40	27.38	27.39	28.17	27.89	27.63	27.50	27.49	27.49	28.21	27.92	27.68	27.59	27.58	27.58	28.24	27.94	27.73	27.67	27.66	27.66

Legend
OAT Outdoor entering air temperature, condenser, °C
TC Total gross cooling capacity, kW
SC Sensible gross cooling capacity, kW
kW Compressor power input, kW

Cooling capacities (continued)

48/50UH 085

48/50UH 085 - Standard unit - cooling mode

OAT, °C		Evaporator air volume - l/s (m³/h)																													
		4440 (16000)						4995 (18000)						5550 (20000)						6105 (22000)						6660 (24000)					
		Indoor entering air wet bulb temperature, evaporator, °C																													
		23	21	19	17	15	13	23	21	19	17	15	13	23	21	19	17	15	13	23	21	19	17	15	13	23	21	19	17	15	13
10	TC	114.8	108.3	102.0	96.42	92.45	91.82	116.4	109.9	103.4	98.13	94.85	94.83	117.7	111.1	104.7	99.81	97.44	97.42	118.7	112.1	106.0	101.2	99.72	99.67	119.6	113.0	107.0	102.6	102.0	101.7
	SC	53.99	64.25	74.46	84.23	91.11	91.82	56.08	67.34	78.46	88.91	94.71	94.83	58.10	70.33	82.33	93.23	97.28	97.42	60.05	73.24	86.08	97.12	99.44	99.67	62.00	76.13	89.70	99.75	102.0	101.7
	kW	17.01	16.48	15.98	15.55	15.27	15.21	17.15	16.62	16.10	15.70	15.46	15.46	17.26	16.73	16.22	15.84	15.67	15.67	17.36	16.82	16.33	15.97	15.86	15.86	17.44	16.90	16.42	16.09	16.04	16.02
15	TC	110.3	104.0	97.81	92.49	89.35	88.78	111.7	105.4	99.20	94.28	91.66	91.64	112.8	106.5	100.5	95.84	94.59	94.10	113.8	107.5	101.5	97.46	96.42	96.24	114.6	108.3	102.5	98.69	98.07	98.09
	SC	52.47	62.66	72.77	82.40	88.00	88.78	54.53	65.73	76.77	86.98	91.52	91.64	56.52	68.71	80.61	91.09	94.38	94.10	58.48	71.62	84.30	94.44	96.42	96.24	60.42	74.52	87.89	96.57	98.07	98.09
	kW	18.76	18.22	17.68	17.24	17.00	16.95	18.89	18.35	17.81	17.41	17.20	17.20	19.00	18.46	17.94	17.55	17.46	17.42	19.10	18.55	18.04	17.70	17.62	17.61	19.18	18.63	18.13	17.82	17.78	17.78
25	TC	100.2	94.49	88.86	84.45	82.26	82.24	101.4	95.65	90.15	86.01	84.77	84.74	102.4	96.60	91.23	87.78	86.86	86.88	103.2	97.35	92.06	89.25	88.73	88.74	103.9	97.90	92.84	90.32	90.33	90.35
	SC	49.11	59.19	69.13	78.39	82.14	82.24	51.18	62.25	73.07	82.56	84.62	84.74	53.17	65.23	76.84	85.60	86.86	86.88	55.11	68.13	80.44	87.58	88.73	88.74	57.05	70.94	83.74	90.32	90.33	90.35
	kW	22.57	22.00	21.44	21.02	20.83	20.83	22.70	22.13	21.58	21.19	21.08	21.08	22.80	22.23	21.71	21.38	21.30	21.31	22.90	22.32	21.80	21.54	21.50	21.50	22.98	22.38	21.89	21.67	21.67	21.67
30	TC	98.42	92.59	86.87	80.28	78.76	78.75	99.66	93.78	88.25	81.88	81.05	81.06	103.3	94.75	89.29	85.98	83.02	83.04	104.2	95.54	90.11	87.56	84.74	84.76	105.0	96.09	91.00	89.04	86.20	86.22
	SC	48.55	58.52	68.33	76.23	78.66	78.75	50.63	61.61	72.32	79.73	81.05	81.06	53.47	64.60	76.06	83.78	83.02	83.04	55.44	67.52	79.63	85.78	84.74	84.76	57.41	70.36	82.83	87.75	86.20	86.22
	kW	22.54	22.08	21.63	23.10	22.96	22.96	22.65	22.19	21.75	23.28	23.21	23.21	20.81	22.27	21.84	21.59	23.43	23.44	20.87	22.34	21.92	21.73	23.63	23.63	20.92	22.39	22.00	21.85	23.79	23.79
35	TC	95.45	89.61	84.03	79.75	78.20	78.21	96.64	90.77	85.34	81.48	80.62	80.63	97.61	91.69	86.28	82.75	82.69	82.70	98.40	92.35	87.10	84.48	84.50	84.52	99.08	93.02	88.05	86.06	86.09	86.10
	SC	47.56	57.44	67.15	75.95	78.20	78.21	49.65	60.54	71.13	79.41	80.62	80.63	51.67	63.54	74.84	82.53	82.69	82.70	53.63	66.41	78.29	84.48	84.50	84.52	55.58	69.25	81.45	86.06	86.09	86.10
	kW	22.75	22.39	22.05	21.80	21.72	21.72	22.82	22.47	22.13	21.91	21.88	21.88	22.89	22.53	22.20	22.01	22.01	22.01	22.94	22.57	22.26	22.12	22.12	22.12	22.99	22.62	22.33	22.22	22.22	22.22
40	TC	89.78	84.33	79.16	75.27	74.44	74.46	90.84	85.32	80.27	76.98	76.66	76.68	91.67	86.05	81.12	78.57	78.56	78.58	92.37	86.70	81.99	80.20	80.21	80.23	92.97	87.27	82.81	81.66	81.66	81.67
	SC	45.71	55.56	65.17	73.27	74.44	74.46	47.78	58.63	69.05	76.24	76.66	76.68	49.78	61.57	72.64	78.50	78.56	78.58	51.74	64.42	75.88	80.20	80.21	80.23	53.68	67.22	78.87	81.58	81.66	81.67
	kW	24.96	24.61	24.28	24.04	24.00	24.00	25.04	24.68	24.36	24.17	24.15	24.15	25.10	24.73	24.42	24.28	24.28	24.28	25.15	24.78	24.49	24.39	24.39	24.39	25.19	24.82	24.55	24.49	24.49	24.49
45	TC	83.87	78.77	74.06	70.62	70.48	70.49	84.76	79.57	74.94	72.82	72.49	72.50	85.49	80.23	75.86	74.22	74.21	74.23	86.09	80.80	76.69	75.69	75.69	75.71	86.58	81.34	77.49	76.98	77.00	77.01
	SC	43.80	53.60	63.09	70.11	70.48	70.49	45.85	56.64	66.84	71.85	72.49	72.50	47.85	59.55	70.21	74.15	74.21	74.23	49.79	62.36	73.25	75.61	75.69	75.71	51.73	65.08	75.68	76.98	77.00	77.01
	kW	27.30	26.96	26.64	26.43	26.42	26.42	27.37	27.01	26.71	26.58	26.56	26.57	27.42	27.06	26.78	26.69	26.69	26.69	27.47	27.11	26.85	26.79	26.80	26.80	27.51	27.16	26.91	26.89	26.89	26.89
48	TC	80.19	75.33	70.86	68.26	67.99	68.00	81.01	76.00	71.72	70.23	69.88	69.89	81.66	76.63	72.64	71.50	71.47	71.49	82.18	77.17	73.36	72.85	72.86	72.87	82.63	77.70	74.36	74.05	74.06	74.08
	SC	42.62	52.40	61.78	67.61	67.99	68.00	44.67	55.40	65.42	69.16	69.88	69.89	46.65	58.29	68.67	71.36	71.47	71.49	48.59	61.06	71.46	72.85	72.86	72.87	50.52	63.75	73.22	74.05	74.06	74.08
	kW	28.74	28.40	28.09	27.93	27.92	27.92	28.80	28.45	28.17	28.07	28.05	28.06	28.85	28.50	28.24	28.17	28.17	28.17	28.89	28.55	28.30	28.28	28.28	28.28	28.93	28.60	28.38	28.37	28.37	28.37

Legend
OAT Outdoor entering air temperature, condenser, °C
TC Total gross cooling capacity, kW
SC Sensible gross cooling capacity, kW
kW Compressor power input, kW

Cooling capacities (continued)

48/50UH 100

48/50UH 100 - Standard unit - cooling mode

OAT, °C		Evaporator air volume - l/s (m³/h)																													
		4440 (16000)						4995 (18000)						5550 (20000)						6105 (22000)						6660 (24000)					
		Indoor entering air wet bulb temperature, evaporator, °C																													
		23	21	19	17	15	13	23	21	19	17	15	13	23	21	19	17	15	13	23	21	19	17	15	13	23	21	19	17	15	13
10	TC	132.7	125.4	118.2	111.4	105.7	103.8	134.9	127.6	120.4	113.6	108.7	107.5	136.7	129.3	122.2	115.5	110.7	110.7	138.1	130.8	123.7	117.1	113.5	113.5	139.4	132.0	124.7	118.6	115.8	115.9
	SC	60.22	70.81	81.24	91.56	100.8	103.8	62.43	74.05	85.52	96.74	105.8	107.5	64.55	77.13	89.63	101.7	110.6	110.7	66.59	80.14	93.65	106.4	113.3	113.5	68.59	83.12	97.53	110.7	115.5	115.9
	kW	23.01	22.24	21.50	20.81	20.25	20.07	23.26	22.48	21.74	21.05	20.55	20.44	23.46	22.69	21.94	21.26	20.78	20.78	23.64	22.86	22.11	21.40	21.08	21.08	23.79	23.00	22.24	21.60	21.34	21.34
15	TC	126.4	119.5	112.7	106.2	101.0	99.72	128.4	121.4	114.6	108.2	104.1	103.1	130.0	123.0	116.3	110.0	106.1	106.1	131.3	124.3	117.5	111.5	109.4	108.7	132.5	125.5	118.5	112.7	111.1	111.0
	SC	57.95	68.41	78.76	88.90	97.71	99.72	60.11	71.57	82.93	93.95	101.3	103.1	62.17	74.62	86.98	98.80	106.0	106.1	64.18	77.59	90.93	103.2	107.2	108.7	66.15	80.51	94.70	107.2	110.8	111.0
	kW	25.09	24.31	23.56	22.85	22.29	22.16	25.33	24.54	23.79	23.09	22.64	22.54	25.53	24.74	23.98	23.29	22.88	22.88	25.70	24.90	24.14	23.44	23.26	23.18	25.85	25.05	24.27	23.63	23.45	23.45
25	TC	113.3	107.1	101.1	95.47	91.06	91.06	114.8	108.7	102.7	97.12	94.00	94.01	116.1	109.9	103.9	98.62	96.54	96.54	117.1	110.9	104.8	100.0	98.73	98.73	118.1	111.8	105.8	101.5	100.7	100.7
	SC	53.21	63.43	73.57	83.38	90.99	91.06	55.28	66.46	77.60	88.13	93.94	94.01	57.25	69.38	81.46	92.47	96.47	96.54	59.18	72.26	85.13	96.31	98.65	98.73	61.11	75.09	88.77	98.38	100.7	100.7
	kW	29.63	28.84	28.08	27.36	26.82	26.82	29.85	29.06	28.30	27.59	27.20	27.21	30.04	29.24	28.47	27.80	27.54	27.54	30.19	29.39	28.60	27.95	27.84	27.84	30.34	29.53	28.75	28.20	28.10	28.10
30	TC	115.5	108.7	97.94	89.90	86.96	86.55	117.3	110.4	99.44	91.43	89.22	89.24	118.7	111.8	100.6	92.76	91.53	91.53	119.9	113.0	106.3	96.91	93.51	93.53	121.1	114.1	107.4	98.33	97.60	97.63
	SC	54.05	64.14	71.97	80.46	85.70	86.55	56.21	67.26	75.93	84.96	89.20	89.24	58.24	70.23	79.73	89.01	91.46	91.53	60.22	73.19	85.97	93.79	93.51	93.53	62.22	76.08	89.69	95.72	97.60	97.63
	kW	26.74	26.24	28.62	29.83	29.45	29.39	26.88	26.38	28.80	30.06	29.77	29.77	27.00	26.49	28.94	30.26	30.10	30.10	27.10	26.59	26.10	28.51	30.39	30.39	27.20	26.68	26.19	28.75	28.68	28.68
35	TC	108.4	102.0	95.95	90.29	87.17	86.78	110.0	103.6	97.47	91.94	90.06	89.62	111.2	104.8	98.54	93.37	92.07	92.06	112.3	105.8	99.63	95.05	94.20	94.21	113.2	106.7	100.6	96.33	96.11	96.12
	SC	51.54	61.48	71.38	80.86	85.99	86.78	53.60	64.54	75.41	85.46	88.33	89.62	55.60	67.47	79.22	89.62	92.00	92.06	57.53	70.32	82.89	92.67	94.20	94.21	59.47	73.15	86.49	95.07	96.11	96.12
	kW	29.25	28.75	28.27	27.84	27.60	27.58	29.38	28.88	28.40	27.97	27.84	27.81	29.49	28.99	28.50	28.10	28.00	28.00	29.59	29.08	28.59	28.24	28.18	28.18	29.67	29.16	28.68	28.35	28.34	28.34
40	TC	101.1	95.22	89.57	84.43	81.97	81.97	102.4	96.50	90.79	85.95	84.54	84.54	103.5	97.58	91.86	87.44	86.73	86.75	104.5	98.47	92.84	89.17	88.65	88.67	105.3	99.22	93.58	90.53	90.35	90.37
	SC	48.94	58.76	68.54	77.66	81.91	81.97	50.96	61.73	72.41	81.94	84.48	84.54	52.90	64.61	76.10	85.30	86.73	86.75	54.80	67.40	79.69	87.60	88.65	88.67	56.68	70.16	83.10	89.43	90.35	90.37
	kW	31.93	31.44	30.97	30.54	30.35	30.35	32.06	31.56	31.08	30.68	30.57	30.57	32.16	31.66	31.18	30.82	30.77	30.77	32.25	31.75	31.27	30.97	30.93	30.94	32.33	31.82	31.35	31.10	31.09	31.09
45	TC	93.53	88.13	82.93	78.41	76.93	76.93	94.67	89.21	83.99	79.92	79.20	79.22	95.66	90.13	84.98	81.65	81.15	81.16	96.41	90.88	85.71	83.27	82.86	82.87	97.07	91.53	86.41	84.56	84.36	84.38
	SC	46.26	55.94	65.55	74.25	76.87	76.93	48.23	58.83	69.28	77.82	79.20	79.22	50.16	61.64	72.87	79.82	81.15	81.16	51.99	64.37	76.25	81.88	82.86	82.87	53.83	67.07	79.45	84.48	84.36	84.38
	kW	34.77	34.29	33.83	33.44	33.31	33.31	34.89	34.40	33.94	33.58	33.53	33.53	34.99	34.50	34.04	33.75	33.71	33.71	35.06	34.57	34.12	33.90	33.87	33.87	35.13	34.64	34.19	34.03	34.02	34.02
48	TC	88.92	83.79	78.86	74.76	73.78	73.78	89.94	84.80	79.89	76.15	75.89	75.91	90.80	85.61	80.77	78.38	77.71	77.73	91.50	86.28	81.46	79.44	79.27	79.29	92.09	86.86	82.17	80.67	80.66	80.68
	SC	44.64	54.20	63.68	71.96	73.72	73.78	46.58	57.07	67.34	75.30	75.89	75.91	48.46	59.84	70.83	76.10	77.71	77.73	50.28	62.53	74.08	79.37	79.27	79.29	52.10	65.19	77.08	80.59	80.66	80.68
	kW	36.53	36.07	35.61	35.24	35.16	35.16	36.64	36.17	35.72	35.39	35.36	35.36	36.73	36.26	35.82	35.59	35.54	35.54	36.80	36.33	35.89	35.70	35.70	35.70	36.86	36.40	35.97	35.84	35.84	35.84

Legend
OAT Outdoor entering air temperature, condenser, °C
TC Total gross cooling capacity, kW
SC Sensible gross cooling capacity, kW
kW Compressor power input, kW

Cooling capacities (continued)

48/50UH 120

48/50UH120 - Standard unit - cooling mode

OAT, °C		Evaporator air volume - l/s (m³/h)																													
		4440 (16000)						4995 (18000)						5550 (20000)						6105 (22000)						6660 (24000)					
		Indoor entering air wet bulb temperature, evaporator, °C																													
		23	21	19	17	15	13	23	21	19	17	15	13	23	21	19	17	15	13	23	21	19	17	15	13	23	21	19	17	15	13
10	TC	144.70	136.53	128.79	121.49	115.69	112.93	146.90	138.87	131.12	124.05	118.89	117.01	148.74	140.73	132.90	126.14	122.07	120.52	150.28	142.38	134.39	128.11	124.44	123.62	156.86	143.65	135.84	129.99	126.40	126.37
	SC	65.92	77.24	88.40	99.26	109.39	112.93	68.24	80.64	92.95	104.81	115.05	117.01	70.46	83.92	97.30	110.13	118.84	120.52	72.62	87.17	101.51	115.01	122.20	123.62	76.49	90.34	105.58	119.65	126.21	126.37
	kW	26.94	26.02	25.17	24.38	23.77	23.49	27.21	26.30	25.44	24.67	24.12	23.93	27.43	26.52	25.65	24.91	24.48	24.32	27.63	26.72	25.83	25.14	24.75	24.67	24.80	26.88	26.00	25.37	24.98	24.98
15	TC	138.78	131.03	123.64	116.68	111.16	109.30	140.80	133.19	125.75	119.09	114.64	113.14	142.48	134.91	127.37	120.99	118.03	116.50	143.93	136.35	128.79	122.97	120.23	119.41	150.59	137.57	130.21	124.70	122.01	121.94
	SC	63.86	75.08	86.19	96.96	106.64	109.30	66.14	78.47	90.71	102.49	111.60	113.14	68.34	81.75	95.04	107.65	114.47	116.50	70.50	84.97	99.17	112.43	117.87	119.41	74.42	88.15	103.24	117.00	121.83	121.94
	kW	29.52	28.58	27.69	26.88	26.25	26.04	29.78	28.85	27.96	27.17	26.66	26.50	30.00	29.08	28.16	27.41	27.07	26.90	30.20	29.27	28.35	27.67	27.35	27.26	27.19	29.43	28.54	27.89	27.58	27.57
25	TC	126.15	119.33	112.70	106.62	102.58	101.47	127.88	121.06	114.28	108.52	105.81	104.86	129.28	122.48	115.75	110.42	108.61	107.78	130.46	123.62	117.08	111.98	110.26	110.28	136.94	124.60	118.24	113.64	112.45	112.48
	SC	59.48	70.56	81.58	92.18	100.22	101.47	61.73	73.91	85.97	97.44	103.05	104.86	63.91	77.17	90.18	102.27	106.19	107.78	66.04	80.36	94.29	106.79	110.26	110.28	69.94	83.52	98.31	110.26	112.45	112.48
	kW	35.11	34.15	33.23	32.40	31.86	31.72	35.37	34.41	33.47	32.68	32.31	32.20	35.59	34.63	33.69	32.96	32.72	32.61	35.78	34.81	33.90	33.20	32.97	32.98	32.47	34.97	34.08	33.45	33.30	33.30
30	TC	128.63	121.03	110.44	104.33	98.33	97.31	130.66	123.01	115.58	106.35	102.93	102.90	132.28	124.62	117.21	108.21	105.80	105.79	133.67	125.98	118.68	109.87	108.40	108.32	134.86	127.11	119.96	114.82	113.44	113.46
	SC	60.34	71.21	80.64	91.09	95.89	97.31	62.68	74.64	86.51	96.34	102.79	102.90	64.91	77.96	90.79	101.13	105.72	105.79	67.10	81.21	94.95	105.40	108.40	108.32	69.27	84.42	99.02	111.16	113.44	113.46
	kW	31.28	30.70	33.19	32.53	34.97	34.84	31.44	30.86	30.29	32.77	32.43	32.42	31.58	30.99	30.43	32.99	32.75	32.75	31.69	31.11	30.55	33.19	33.04	33.04	31.79	31.20	30.66	30.28	30.18	30.18
35	TC	121.80	114.64	107.77	101.68	98.41	97.34	123.58	116.42	109.36	103.79	100.72	100.69	125.06	117.83	110.94	105.61	103.54	103.55	126.26	119.01	112.29	107.22	106.05	106.06	127.29	120.03	113.39	109.27	108.27	108.28
	SC	57.98	68.78	79.53	89.84	95.96	97.34	60.28	72.19	83.91	95.03	100.59	100.69	62.51	75.49	88.17	99.79	103.54	103.55	64.67	78.72	92.33	103.87	106.05	106.06	66.82	81.92	96.33	106.75	108.27	108.28
	kW	34.28	33.70	33.15	32.66	32.40	32.32	34.44	33.86	33.29	32.84	32.60	32.60	34.57	33.98	33.43	33.00	32.84	32.84	34.68	34.09	33.55	33.15	33.05	33.06	34.78	34.18	33.65	33.32	33.25	33.25
40	TC	114.60	107.95	101.41	95.94	93.96	92.83	116.16	109.46	103.03	97.91	95.86	95.87	117.42	110.71	104.41	99.56	98.46	98.48	118.48	111.71	105.57	101.55	100.75	100.77	119.36	112.48	106.45	102.92	102.76	102.78
	SC	55.51	66.26	76.89	87.04	91.16	92.83	57.78	69.63	81.26	92.03	95.86	95.87	59.98	72.91	85.47	96.44	98.46	98.48	62.14	76.12	89.57	99.38	100.75	100.77	64.27	79.27	93.43	101.91	102.76	102.78
	kW	37.49	36.92	36.34	35.87	35.70	35.61	37.64	37.06	36.50	36.06	35.88	35.89	37.76	37.18	36.63	36.21	36.12	36.13	37.87	37.28	36.75	36.40	36.34	36.34	37.95	37.36	36.84	36.53	36.52	36.53
45	TC	107.02	100.85	94.86	90.06	87.94	87.95	108.36	102.16	96.32	91.72	90.69	90.71	109.43	103.19	97.53	93.79	93.06	93.07	110.30	103.95	98.41	95.48	95.11	95.13	111.06	104.58	99.42	97.40	96.90	96.91
	SC	52.93	63.62	74.14	84.07	87.94	87.95	55.18	66.97	78.48	88.77	90.69	90.71	57.37	70.23	82.65	91.92	93.06	93.07	59.50	73.39	86.58	94.30	95.11	95.13	61.62	76.44	90.17	96.00	96.90	96.91
	kW	40.86	40.30	39.74	39.31	39.12	39.12	41.00	40.43	39.89	39.47	39.38	39.39	41.11	40.54	40.02	39.68	39.62	39.62	41.20	40.62	40.11	39.85	39.82	39.82	41.28	40.69	40.22	40.04	40.00	40.00
48	TC	102.30	96.43	90.68	86.37	84.85	84.87	103.49	97.60	92.01	88.14	87.44	87.45	104.45	98.54	93.16	89.79	89.65	89.66	105.24	99.15	94.14	107.84	91.54	91.56	105.91	99.81	95.07	93.22	93.20	93.21
	SC	51.35	62.00	72.39	82.15	84.85	84.87	53.58	65.33	76.71	86.20	87.44	87.45	55.75	68.58	80.84	89.35	89.65	89.66	57.88	71.68	84.64	107.84	91.54	91.56	59.99	74.68	88.11	93.06	93.20	93.21
	kW	42.94	42.39	41.83	41.43	41.29	41.29	43.07	42.51	41.98	41.62	41.55	41.55	43.17	42.61	42.11	41.79	41.78	41.78	43.26	42.68	42.22	43.88	41.98	41.98	43.33	42.76	42.32	42.15	42.15	42.15

Legend
OAT Outdoor entering air temperature, condenser, °C
TC Total gross cooling capacity, kW
SC Sensible gross cooling capacity, kW
kW Compressor power input, kW

Heating capacities

48/50UH 045

48/50UH 045 - Standard unit - heating mode

Return air, °C db	Air flow l/s	Air flow m³/h		Outdoor coil entering air temperature, °C wb -11	-6	-3	0	3	6	9	13	18
10	2022	7300	CAP	27.88	32.58	35.69	38.99	42.28	46.05	50.02	55.78	63.46
			IC	23.28	26.40	28.46	31.09	37.45	46.05	50.02	55.78	63.46
			kW	7.88	8.42	8.77	9.15	9.54	9.98	10.44	11.16	12.16
	2528	9100	CAP	27.70	32.39	35.49	38.80	42.10	45.90	49.89	55.76	63.62
			IC	23.29	26.46	28.56	31.21	37.52	45.90	49.89	55.76	63.62
			kW	7.44	7.88	8.18	8.49	8.82	9.17	9.55	10.13	10.93
	3034	10900	CAP	27.59	32.27	35.37	38.67	41.98	45.80	49.81	55.75	63.72
			IC	23.30	26.50	28.62	31.29	37.57	45.80	49.81	55.75	63.72
			kW	7.15	7.54	7.79	8.07	8.36	8.66	8.99	9.49	10.17
20	2022	7300	CAP	26.70	31.09	34.00	37.08	40.12	43.64	47.39	52.76	59.88
			IC	21.68	24.49	26.35	28.81	34.94	43.64	47.39	52.76	59.88
			kW	9.82	10.41	10.80	11.22	11.63	12.09	12.60	13.38	14.40
	2528	9100	CAP	26.48	30.84	33.75	36.82	39.86	43.40	47.18	52.60	59.95
			IC	21.65	24.49	26.39	28.86	34.94	43.40	47.18	52.60	59.95
			kW	9.29	9.79	10.11	10.46	10.81	11.18	11.60	12.20	13.06
	3034	10900	CAP	26.33	30.67	33.58	36.65	39.69	43.24	47.05	52.52	59.99
			IC	21.62	24.49	26.41	28.90	34.93	43.24	47.05	52.52	59.99
			kW	8.95	9.38	9.67	9.97	10.27	10.60	10.96	11.48	12.20
27	2022	7300	CAP	25.94	30.08	32.85	35.75	38.65	42.00	45.52	50.58	57.29
			IC	20.65	23.23	24.94	27.27	33.27	42.00	45.52	50.58	57.29
			kW	11.39	12.04	12.44	12.88	13.30	13.79	14.30	15.03	16.02
	2528	9100	CAP	25.70	29.79	32.55	35.45	38.34	41.71	45.25	50.41	57.29
			IC	20.59	23.19	24.93	27.28	33.21	41.71	45.25	50.41	57.29
			kW	10.81	11.35	11.69	12.05	12.41	12.80	13.22	13.86	14.68
	3034	10900	CAP	25.53	29.61	32.35	35.24	38.14	41.51	45.08	50.28	57.28
			IC	20.55	23.16	24.92	27.28	33.16	41.51	45.08	50.28	57.28
			kW	10.43	10.90	11.20	11.52	11.83	12.17	12.54	13.07	13.81

Legend
db Dry bulb temperature
wb Wet bulb temperature
CAP Gross instantaneous heating capacity, kW
IC Gross integrated heating capacity, kW
kW Compressor power input, kW

48/50UH 055

48/50UH 055 - Standard unit - heating mode

Return air, °C db	Air flow l/s	Air flow m³/h		Outdoor coil entering air temperature, °C wb -11	-6	-3	0	3	6	9	13	18
10	2755	10000	CAP	33.78	39.60	43.32	47.32	51.37	55.94	60.75	67.64	76.63
			IC	28.31	32.23	34.71	37.91	45.65	55.94	60.75	67.64	76.63
			kW	9.40	9.97	10.35	10.75	11.16	11.62	12.11	12.83	13.82
	3444	12400	CAP	33.65	39.50	43.17	47.21	51.29	55.91	60.79	67.82	77.03
			IC	28.37	32.38	34.86	38.12	45.84	55.91	60.79	67.82	77.03
			kW	9.01	9.50	9.82	10.17	10.51	10.89	11.31	11.91	12.72
	4133	14900	CAP	33.57	39.43	43.09	47.16	51.26	55.92	60.83	67.97	77.26
			IC	28.41	32.47	34.98	38.28	45.98	55.92	60.83	67.97	77.26
			kW	8.76	9.20	9.48	9.79	10.10	10.44	10.81	11.33	12.02
20	2755	10000	CAP	32.91	38.35	41.95	45.75	49.48	53.76	58.27	64.77	73.30
			IC	26.81	30.33	32.64	35.69	43.22	53.76	58.27	64.77	73.30
			kW	11.62	12.28	12.71	13.17	13.61	14.11	14.66	15.46	16.54
	3444	12400	CAP	32.65	38.07	41.66	45.45	49.20	53.51	58.08	64.72	73.46
			IC	26.76	30.33	32.68	35.74	43.22	53.51	58.08	64.72	73.46
			kW	11.12	11.68	12.05	12.43	12.80	13.23	13.68	14.34	15.22
	4133	14900	CAP	32.49	37.90	41.48	45.27	49.04	53.38	58.00	64.74	73.67
			IC	26.73	30.33	32.71	35.79	43.24	53.38	58.00	64.74	73.67
			kW	10.80	11.29	11.62	11.97	12.29	12.67	13.07	13.64	14.41
27	2755	10000	CAP	32.59	37.84	41.30	44.93	48.53	52.60	56.95	63.07	71.07
			IC	26.01	29.30	31.46	34.39	41.87	52.60	56.95	63.07	71.07
			kW	13.55	14.28	14.75	15.25	15.75	16.25	16.84	17.66	18.74
	3444	12400	CAP	32.24	37.43	40.87	44.48	48.06	52.15	56.52	62.78	71.07
			IC	25.89	29.20	31.39	34.32	41.70	52.15	56.52	62.78	71.07
			kW	12.95	13.57	13.96	14.37	14.77	15.19	15.67	16.36	17.29
	4133	14900	CAP	32.02	37.18	40.60	44.22	47.80	51.91	56.29	62.62	71.11
			IC	25.81	29.14	31.35	34.29	41.63	51.91	56.29	62.62	71.11
			kW	12.57	13.11	13.46	13.82	14.18	14.55	14.96	15.56	16.37

Legend
db Dry bulb temperature
wb Wet bulb temperature
CAP Gross instantaneous heating capacity, kW
IC Gross integrated heating capacity, kW
kW Compressor power input, kW

Heating capacities (continued)

48/50UH 065

48/50UH 065 - Standard unit - heating mode

Return air, °C db	Air flow l/s	m³/h		Outdoor coil entering air temperature, °C wb -11	-6	-3	0	3	6	9	13	18
10	2778	10000	CAP	37.72	44.38	48.77	53.45	58.14	63.35	68.92	76.86	87.21
			IC	31.51	35.97	38.90	42.62	51.49	63.35	68.92	76.86	87.21
			kW	10.66	11.38	11.84	12.34	12.84	13.40	14.01	14.90	16.13
	3472	12500	CAP	37.59	44.23	48.62	53.32	58.03	63.28	68.91	77.00	87.56
			IC	31.61	36.14	39.12	42.89	51.72	63.28	68.91	77.00	87.56
			kW	10.09	10.69	11.06	11.47	11.87	12.31	12.80	13.48	14.41
	4166	15000	CAP	37.49	44.13	48.53	53.23	57.96	63.23	68.91	77.07	87.90
			IC	31.67	36.25	39.28	43.07	51.87	63.23	68.91	77.07	87.90
			kW	9.72	10.24	10.56	10.91	11.25	11.63	12.03	12.59	13.39
20	2778	10000	CAP	36.81	43.19	47.43	51.90	56.39	61.45	66.82	74.48	84.50
			IC	29.90	34.01	36.74	40.30	49.09	61.45	66.82	74.48	84.50
			kW	13.32	14.15	14.71	15.28	15.84	16.49	17.18	18.16	19.52
	3472	12500	CAP	36.62	42.96	47.20	51.67	56.17	61.26	66.70	74.52	84.85
			IC	29.93	34.10	36.88	40.47	49.20	61.26	66.70	74.52	84.85
			kW	12.67	13.36	13.81	14.28	14.72	15.25	15.80	16.57	17.64
	4166	15000	CAP	36.48	42.81	47.04	51.51	56.02	61.12	66.59	74.52	85.07
			IC	29.95	34.16	36.97	40.58	49.28	61.12	66.59	74.52	85.07
			kW	12.24	12.84	13.23	13.63	14.01	14.46	14.91	15.56	16.46
27	2778	10000	CAP	36.28	42.46	46.56	50.88	55.24	60.14	65.34	72.75	82.31
			IC	28.87	32.75	35.31	38.75	47.49	60.14	65.34	72.75	82.31
			kW	15.45	16.37	16.97	17.59	18.21	18.89	19.60	20.64	21.96
	3472	12500	CAP	36.04	42.17	46.26	50.57	54.93	59.86	65.12	72.69	82.66
			IC	28.87	32.79	35.39	38.86	47.53	59.86	65.12	72.69	82.66
			kW	14.75	15.50	16.00	16.50	17.00	17.55	18.13	18.98	20.09
	4166	15000	CAP	35.88	41.99	46.06	50.36	54.73	59.67	64.95	72.60	82.82
			IC	28.87	32.82	35.45	38.93	47.54	59.67	64.95	72.60	82.82
			kW	14.28	14.94	15.37	15.80	16.22	16.69	17.17	17.87	18.84

Legend
db Dry bulb temperature
wb Wet bulb temperature
CAP Gross instantaneous heating capacity, kW
IC Gross integrated heating capacity, kW
kW Compressor power input, kW

48/50UH 075

48/50UH 075 - Standard unit - heating mode

Return air, °C db	Air flow l/s	m³/h		Outdoor coil entering air temperature, °C wb -11	-6	-3	0	3	6	9	13	18
10	3155	11400	CAP	46.14	53.86	58.92	64.37	69.81	75.70	82.17	91.52	103.64
			IC	38.45	43.54	46.86	51.19	61.71	75.70	82.17	91.52	103.64
			kW	13.93	14.83	15.41	16.04	16.66	17.35	18.11	19.26	20.84
	3944	14200	CAP	45.75	53.42	58.46	63.89	69.33	75.22	81.75	91.20	103.56
			IC	38.40	43.56	46.94	51.30	61.71	75.22	81.75	91.20	103.56
			kW	13.04	13.75	14.21	14.70	15.19	15.70	16.28	17.12	18.29
	4733	17000	CAP	45.48	53.09	58.14	63.56	68.99	74.88	81.44	90.96	103.42
			IC	38.36	43.54	46.98	51.36	61.68	74.88	81.44	90.96	103.42
			kW	12.45	13.05	13.44	13.84	14.23	14.66	15.13	15.79	16.68
20	3155	11400	CAP	45.59	52.94	57.80	62.96	68.12	73.86	80.10	88.00	100.60
			IC	36.92	41.56	44.62	48.74	59.17	73.86	80.10	88.00	100.60
			kW	17.40	18.39	19.04	19.72	20.39	21.17	22.02	23.06	24.89
	3944	14200	CAP	45.15	52.46	57.29	62.44	67.61	73.37	79.65	88.24	100.72
			IC	36.83	41.55	44.66	48.80	59.13	73.37	79.65	88.24	100.72
			kW	16.41	17.21	17.72	18.26	18.80	19.41	20.04	20.92	22.30
	4733	17000	CAP	44.85	52.13	56.93	62.08	67.25	72.99	79.31	88.27	100.70
			IC	36.76	41.52	44.66	48.83	59.08	72.99	79.31	88.27	100.70
			kW	15.75	16.43	16.87	17.32	17.75	18.26	18.78	19.52	20.59
27	3155	11400	CAP	45.21	52.22	56.89	61.84	66.79	72.36	78.33	86.87	97.81
			IC	35.86	40.14	42.99	46.96	57.31	72.36	78.33	86.87	97.81
			kW	20.08	21.06	21.71	22.42	23.12	23.91	24.74	25.96	27.48
	3944	14200	CAP	44.75	51.71	56.36	61.32	66.26	71.87	77.93	86.51	98.11
			IC	35.76	40.11	43.02	47.01	57.25	71.87	77.93	86.51	98.11
			kW	19.03	19.82	20.36	20.93	21.48	22.12	22.80	23.76	25.04
	4733	17000	CAP	44.44	51.36	56.00	60.95	65.89	71.48	77.58	86.33	98.16
			IC	35.69	40.07	43.01	47.02	57.17	71.48	77.58	86.33	98.16
			kW	18.34	19.00	19.46	19.94	20.40	20.93	21.49	22.30	23.39

Legend
db Dry bulb temperature
wb Wet bulb temperature
CAP Gross instantaneous heating capacity, kW
IC Gross integrated heating capacity, kW
kW Compressor power input, kW

Heating capacities (continued)

48/50UH 085

48/50UH 085 - Standard unit - heating mode

Return air, °C db	Air flow l/s	m³/h		Outdoor coil entering air temperature, °C wb -11	-6	-3	0	3	6	9	13	18
10	4440	16000	CAP	52.30	61.30	67.13	73.37	79.58	86.65	94.19	105.00	119.29
			IC	43.88	49.96	53.86	58.87	70.80	86.65	94.19	105.00	119.29
			kW	13.49	14.25	14.76	15.31	15.87	16.51	17.21	18.24	19.67
	5550	20000	CAP	52.07	61.03	66.85	73.10	79.33	86.43	94.02	104.99	119.55
			IC	43.94	50.08	54.05	59.10	70.95	86.43	94.02	104.99	119.55
			kW	12.86	13.49	13.91	14.36	14.82	15.33	15.90	16.73	17.87
	6660	24000	CAP	51.90	60.87	66.67	72.92	79.16	86.27	93.91	104.97	119.69
			IC	43.96	50.18	54.17	59.25	71.05	86.27	93.91	104.97	119.69
			kW	12.45	12.99	13.36	13.75	14.15	14.59	15.07	15.78	16.75
20	4440	16000	CAP	51.24	59.76	65.37	71.33	77.16	84.08	91.27	101.65	115.36
			IC	41.79	47.31	50.93	55.72	67.46	84.08	91.27	101.65	115.36
			kW	16.70	17.55	18.12	18.73	19.35	20.06	20.81	21.92	23.45
	5550	20000	CAP	50.93	59.42	65.01	70.96	76.81	83.76	91.01	101.56	115.64
			IC	41.77	47.37	51.05	55.86	67.52	83.76	91.01	101.56	115.64
			kW	15.98	16.69	17.15	17.65	18.15	18.73	19.33	20.24	21.48
	6660	24000	CAP	50.73	59.19	64.77	70.71	76.58	83.53	90.82	101.46	115.78
			IC	41.77	47.40	51.11	55.94	67.56	83.53	90.82	101.46	115.78
			kW	15.51	16.12	16.52	16.95	17.38	17.87	18.39	19.16	20.22
27	4440	16000	CAP	50.53	58.71	64.12	69.84	75.43	82.12	89.08	99.04	112.16
			IC	40.37	45.52	48.92	53.52	65.14	82.12	89.08	99.04	112.16
			kW	19.21	20.11	20.71	21.36	21.99	22.73	23.53	24.66	26.22
	5550	20000	CAP	50.17	58.32	63.71	69.42	75.02	81.74	88.76	98.88	112.39
			IC	40.32	45.54	48.98	53.61	65.14	81.74	88.76	98.88	112.39
			kW	18.43	19.18	19.68	20.20	20.73	21.33	21.97	22.90	24.17
	6660	24000	CAP	49.93	58.06	63.44	69.14	74.74	81.47	88.52	98.74	112.49
			IC	40.29	45.53	49.02	53.66	65.12	81.47	88.52	98.74	112.49
			kW	17.93	18.58	19.01	19.45	19.91	20.42	20.97	21.76	22.85

Legend
db Dry bulb temperature
wb Wet bulb temperature
CAP Gross instantaneous heating capacity, kW
IC Gross integrated heating capacity, kW
kW Compressor power input, kW

48/50UH 100

48/50UH 100 - Standard unit - heating mode

Return air, °C db	Air flow l/s	m³/h		Outdoor coil entering air temperature, °C wb -11	-6	-3	0	3	6	9	13	18
10	4440	16000	CAP	61.64	71.70	78.20	85.13	91.97	99.69	107.92	119.88	135.75
			IC	51.46	58.10	62.36	67.89	81.47	99.69	107.92	119.88	135.75
			kW	17.99	19.11	19.84	20.61	21.33	22.20	23.13	24.46	26.25
	5550	20000	CAP	61.64	71.81	78.40	85.44	92.48	100.38	108.84	121.29	137.95
			IC	51.80	58.65	63.06	68.73	82.43	100.38	108.84	121.29	137.95
			kW	16.98	17.89	18.48	19.08	19.69	20.40	21.14	22.19	23.60
	6660	24000	CAP	61.64	71.91	78.55	85.68	92.86	100.82	109.48	122.24	139.42
			IC	52.03	59.04	63.55	69.32	83.10	100.82	109.48	122.24	139.42
			kW	16.33	17.11	17.62	18.14	18.68	19.27	19.90	20.78	21.97
20	4440	16000	CAP	60.87	70.39	76.61	83.15	89.56	96.93	104.66	115.75	130.47
			IC	49.38	55.39	59.31	64.55	77.97	96.93	104.66	115.75	130.47
			kW	22.86	24.14	24.99	25.88	26.77	27.72	28.73	30.10	32.02
	5550	20000	CAP	60.71	70.34	76.63	83.26	89.81	97.33	105.31	116.91	132.57
			IC	49.58	55.80	59.85	65.20	78.67	97.33	105.31	116.91	132.57
			kW	21.49	22.57	23.26	23.96	24.65	25.40	26.16	27.31	28.83
	6660	24000	CAP	60.64	70.33	76.66	83.37	90.05	97.65	105.82	117.76	134.00
			IC	49.75	56.09	60.22	65.67	79.19	97.65	105.82	117.76	134.00
			kW	20.67	21.60	22.17	22.77	23.35	23.97	24.65	25.62	26.89
27	4440	16000	CAP	60.75	69.99	75.97	82.21	88.29	95.38	102.69	112.90	126.56
			IC	48.26	53.91	57.55	62.58	75.91	95.38	102.69	112.90	126.56
			kW	27.32	28.76	29.64	30.60	31.54	32.44	33.39	34.97	36.94
	5550	20000	CAP	60.41	69.69	75.73	82.05	88.24	95.51	103.12	114.08	128.70
			IC	48.33	54.12	57.89	63.02	76.33	95.51	103.12	114.08	128.70
			kW	25.55	26.68	27.40	28.12	28.88	29.66	30.51	31.66	33.11
	6660	24000	CAP	60.20	69.54	75.60	82.02	88.31	95.70	103.44	114.72	130.04
			IC	48.39	54.31	58.14	63.37	76.71	95.70	103.44	114.72	130.04
			kW	24.50	25.46	26.02	26.67	27.31	27.97	28.67	29.61	30.94

Legend
db Dry bulb temperature
wb Wet bulb temperature
CAP Gross instantaneous heating capacity, kW
IC Gross integrated heating capacity, kW
kW Compressor power input, kW

Heating capacities (continued)

48/50UH 120

48/50UH 120 - Standard unit - heating mode												
Return air, °C db	Air flow l/s	m³/h		Outdoor coil entering air temperature, °C wb -11	-6	-3	0	3	6	9	13	18
10	4440	16000	CAP	75.51	88.49	96.86	105.85	114.94	124.52	134.85	149.35	167.68
			IC	63.04	71.70	77.24	84.41	101.82	124.52	134.85	149.35	167.68
			kW	22.63	24.21	25.26	26.37	27.52	28.81	30.18	32.19	35.01
	5550	20000	CAP	75.03	87.95	96.29	105.28	114.46	124.03	134.53	149.45	168.66
			IC	63.05	71.83	77.45	84.69	102.01	124.03	134.53	149.45	168.66
			kW	21.29	22.55	23.39	24.25	25.15	26.14	27.19	28.76	31.03
	6660	24000	CAP	74.69	87.54	95.91	104.91	114.14	123.71	134.31	149.55	169.24
			IC	63.04	71.87	77.59	84.87	102.14	123.71	134.31	149.55	169.24
			kW	20.41	21.49	22.20	22.92	23.66	24.46	25.32	26.66	28.54
20	4440	16000	CAP	73.19	85.47	93.45	101.96	110.44	119.79	129.73	143.63	160.97
			IC	59.37	67.26	72.34	79.15	96.15	119.79	129.73	143.63	160.97
			kW	28.17	29.99	31.15	32.41	33.68	35.08	36.64	38.85	41.72
	5550	20000	CAP	72.52	84.76	92.71	101.20	109.74	119.11	129.19	143.42	161.44
			IC	59.22	67.24	72.41	79.25	96.12	119.11	129.19	143.42	161.44
			kW	26.65	28.11	29.04	30.04	31.05	32.14	33.34	35.07	37.37
	6660	24000	CAP	72.12	84.30	92.21	100.70	109.27	118.66	128.84	143.31	161.71
			IC	59.16	67.22	72.44	79.32	96.10	118.66	128.84	143.31	161.71
			kW	25.65	26.89	27.68	28.52	29.36	30.27	31.26	32.69	34.59
27	4440	16000	CAP	71.83	83.55	91.22	99.35	107.26	116.54	126.01	139.22	155.59
			IC	57.07	64.36	69.11	75.63	92.22	116.54	126.01	139.22	155.59
			kW	32.65	34.57	35.86	37.18	38.55	40.00	41.55	43.69	46.50
	5550	20000	CAP	71.07	82.73	90.35	98.45	106.40	115.70	125.30	139.01	156.16
			IC	56.86	64.25	69.07	75.62	92.05	115.70	125.30	139.01	156.16
			kW	30.99	32.55	33.59	34.63	35.71	36.86	38.10	39.93	42.19
	6660	24000	CAP	70.60	82.18	89.76	97.86	105.83	115.12	124.81	138.75	156.47
			IC	56.74	64.18	69.03	75.61	91.92	115.12	124.81	138.75	156.47
			kW	29.89	31.23	32.12	32.99	33.89	34.85	35.88	37.43	39.40

Legend

db Dry bulb temperature
wb Wet bulb temperature
CAP Gross instantaneous heating capacity, kW
IC Gross integrated heating capacity, kW
kW Compressor power input, kW

Fan performances

48/50UA-UH 045

48/50UA-UH 045 - unit with standard static pressure

Air flow		External static pressure, Pa																			
		50		75		100		125		150		175		200		225		250		275	
l/s	m³/h	r/s	kW	r/s	kW	r/s	kW	r/s	kW	r/s	kW	r/s	kW	r/s	kW	r/s	kW	r/s	kW	r/s	kW
2000	7200	-	-	-	-	11.23	0.758	12.10	0.851	12.93	0.948	13.73	1.050	14.52	1.155	15.27	1.262	16.00	1.372	16.70	1.485
2100	7560	-	-	10.70	0.755	11.55	0.848	12.37	0.944	13.18	1.045	13.97	1.149	14.73	1.256	15.47	1.368	16.17	1.481	16.87	1.597
2200	7920	-	-	11.05	0.849	11.87	0.944	12.67	1.044	13.43	1.148	14.20	1.255	14.93	1.366	15.65	1.480	16.35	1.596	17.03	1.715
2300	8280	10.60	0.856	11.38	0.949	12.17	1.048	12.95	1.151	13.70	1.258	14.43	1.369	15.15	1.482	15.85	1.599	16.53	1.719	17.20	1.841
2400	8640	11.00	0.963	11.77	1.062	12.52	1.164	13.27	1.269	13.98	1.379	14.70	1.493	15.40	1.610	16.08	1.730	16.75	1.853	17.40	1.978
2500	9000	11.40	1.081	12.13	1.182	12.87	1.287	13.58	1.396	14.28	1.510	14.97	1.627	15.65	1.746	16.32	1.870	16.97	1.995	17.60	2.124
2600	9360	11.83	1.210	12.53	1.315	13.23	1.424	13.92	1.536	14.60	1.652	15.27	1.773	15.93	1.896	16.58	2.021	17.22	2.150	17.83	2.283
2700	9720	12.22	1.344	12.90	1.451	13.57	1.564	14.23	1.680	14.90	1.799	15.55	1.922	16.18	2.047	16.82	2.178	17.43	2.309	18.03	2.445
2800	10080	12.63	1.489	13.28	1.602	13.93	1.718	14.58	1.836	15.22	1.959	15.85	2.086	16.47	2.215	17.08	2.348	17.68	2.483	18.27	2.620
2900	10440	13.03	1.646	13.67	1.761	14.30	1.880	14.92	2.002	15.53	2.129	16.15	2.258	16.75	2.391	17.35	2.526	17.93	2.665	18.52	2.806
3000	10800	13.47	1.816	14.07	1.935	14.68	2.057	15.28	2.184	15.88	2.313	16.48	2.446	17.07	2.581	17.65	2.720	18.22	2.862	18.78	3.005
3100	11160	13.88	1.996	14.47	2.119	15.07	2.245	15.65	2.374	16.23	2.507	16.80	2.643	17.37	2.782	17.93	2.924	18.50	3.069	19.05	3.216

48/50UA-UH 045 - unit with high static pressure H1

Air flow		External static pressure, Pa																			
		175		200		225		250		275		300		325		350		375		400	
l/s	m³/h	r/s	kW	r/s	kW	r/s	kW	r/s	kW	r/s	kW	r/s	kW	r/s	kW	r/s	kW	r/s	kW	r/s	kW
2000	7200	13.73	1.042	14.52	1.147	15.27	1.253	16.00	1.363	16.70	1.474	17.38	1.589	18.03	1.706	18.67	1.826	19.28	1.947	19.87	2.069
2100	7560	13.97	1.141	14.73	1.247	15.47	1.358	16.17	1.471	16.87	1.586	17.53	1.703	18.17	1.823	18.80	1.945	19.40	2.070	20.00	2.197
2200	7920	14.20	1.246	14.93	1.357	15.65	1.469	16.35	1.585	17.03	1.703	17.68	1.824	18.32	1.948	18.93	2.072	19.53	2.201	20.12	2.330
2300	8280	14.43	1.359	15.15	1.472	15.85	1.588	16.53	1.707	17.20	1.828	17.83	1.951	18.47	2.078	19.08	2.207	19.67	2.337	20.25	2.470
2400	8640	14.70	1.483	15.40	1.599	16.08	1.718	16.75	1.840	17.40	1.964	18.03	2.091	18.65	2.221	19.25	2.353	19.83	2.487	20.40	2.623
2500	9000	14.97	1.615	15.65	1.734	16.32	1.856	16.97	1.981	17.60	2.109	18.22	2.240	18.82	2.372	19.42	2.507	19.98	2.643	20.55	2.783
2600	9360	15.27	1.760	15.93	1.883	16.58	2.007	17.22	2.135	17.83	2.267	18.43	2.400	19.03	2.535	19.60	2.674	20.17	2.814	20.73	2.957
2700	9720	15.55	1.909	16.18	2.033	16.82	2.163	17.43	2.293	18.03	2.427	18.63	2.564	19.22	2.703	19.78	2.844	20.33	2.988	20.88	3.132
2800	10080	15.85	2.071	16.47	2.199	17.08	2.331	17.68	2.465	18.27	2.602	18.85	2.742	19.42	2.883	19.98	3.028	20.53	3.174	21.07	3.322
2900	10440	16.15	2.242	16.75	2.374	17.35	2.508	17.93	2.646	18.52	2.786	19.08	2.928	19.63	3.073	20.18	3.220	20.73	3.370	21.25	3.522
3000	10800	16.48	2.429	17.07	2.563	17.65	2.700	18.22	2.842	18.78	2.984	19.33	3.130	19.88	3.278	20.42	3.429	20.95	3.581	21.47	3.737
3100	11160	16.80	2.624	17.37	2.762	17.93	2.903	18.50	3.047	19.05	3.193	19.58	3.341	20.12	3.493	20.65	3.646	21.17	3.802	21.68	3.961

48/50UA-UH 045 - Unit with high static pressure H2

Air flow		External static pressure, Pa																			
		275		300		325		350		375		400		425		450		475		500	
l/s	m³/h	r/s	kW	r/s	kW	r/s	kW	r/s	kW	r/s	kW	r/s	kW	r/s	kW	r/s	kW	r/s	kW	r/s	kW
2000	7200	16.45	1.515	17.05	1.609	17.63	1.704	18.20	1.802	18.77	1.901	19.30	2.002	19.85	2.103	20.37	2.205	20.88	2.310	21.40	2.415
2100	7560	16.68	1.653	17.27	1.751	17.83	1.849	18.40	1.949	18.93	2.050	19.48	2.154	20.00	2.259	20.52	2.365	21.03	2.472	21.52	2.581
2200	7920	16.93	1.802	17.50	1.901	18.05	2.003	18.60	2.106	19.13	2.211	19.65	2.317	20.17	2.424	20.67	2.533	21.17	2.644	21.67	2.754
2300	8280	17.20	1.961	17.75	2.063	18.28	2.168	18.80	2.273	19.33	2.381	19.83	2.490	20.35	2.600	20.83	2.712	21.33	2.825	21.82	2.939
2400	8640	17.48	2.134	18.02	2.239	18.53	2.346	19.05	2.456	19.55	2.565	20.05	2.677	20.55	2.791	21.03	2.906	21.52	3.021	21.98	3.139
2500	9000	17.78	2.320	18.30	2.428	18.80	2.537	19.30	2.649	19.80	2.762	20.28	2.877	20.77	2.993	21.23	3.111	21.72	3.230	22.17	3.350
2600	9360	18.10	2.520	18.60	2.632	19.10	2.745	19.58	2.859	20.07	2.976	20.53	3.092	21.00	3.212	21.47	3.332	21.93	3.453	22.38	3.577
2700	9720	18.42	2.729	18.90	2.843	19.37	2.959	19.85	3.077	20.32	3.196	20.78	3.316	21.23	3.437	21.70	3.560	22.13	3.685	22.58	3.811
2800	10080	18.75	2.955	19.22	3.072	19.68	3.191	20.13	3.311	20.60	3.433	21.05	3.556	21.50	3.680	21.93	3.807	22.38	3.934	22.82	4.063
2900	10440	19.08	3.195	19.53	3.315	19.98	3.436	20.43	3.559	20.88	3.684	21.33	3.810	21.77	3.938	22.20	4.066	22.62	4.197	23.05	4.328
3000	10800	19.45	3.452	19.88	3.574	20.33	3.699	20.77	3.826	21.20	3.953	21.62	4.082	22.05	4.213	22.47	4.344	22.88	4.477	23.22	4.612
3100	11160	19.80	3.724	20.23	3.849	20.67	3.977	21.08	4.107	21.52	4.237	21.93	4.369	22.35	4.502	22.75	4.637	23.17	4.773	23.57	4.911

48/50UA-UH 045 - Unit with high static pressure H3

Air flow		External static pressure, Pa																			
		375		405		435		465		495		525		555		585		615		645	
l/s	m³/h	r/s	kW	r/s	kW	r/s	kW	r/s	kW	r/s	kW	r/s	kW	r/s	kW	r/s	kW	r/s	kW	r/s	kW
2000	7200	18.77	1.901	19.42	2.021	20.05	2.144	20.68	2.268	21.30	2.394	21.88	2.522	22.48	2.652	23.05	2.783	23.62	2.916	24.15	3.050
2100	7560	18.93	2.050	19.58	2.175	20.22	2.301	20.82	2.429	21.43	2.558	22.02	2.690	22.58	2.823	23.15	2.958	23.72	3.094	24.25	3.232
2200	7920	19.13	2.211	19.75	2.338	20.37	2.468	20.98	2.599	21.57	2.732	22.15	2.867	22.72	3.004	23.27	3.142	23.82	3.282	24.35	3.424
2300	8280	19.33	2.381	19.93	2.512	20.55	2.645	21.13	2.780	21.72	2.916	22.28	3.055	22.85	3.195	23.40	3.337	23.93	3.480	24.47	3.626
2400	8640	19.55	2.565	20.15	2.701	20.75	2.837	21.32	2.974	21.90	3.115	22.45	3.257	23.00	3.401	23.55	3.546	24.08	3.693	24.60	3.842
2500	9000	19.80	2.762	20.38	2.900	20.95	3.040	21.52	3.182	22.08	3.325	22.63	3.471	23.17	3.617	23.70	3.767	24.22	3.917	24.73	4.070
2600	9360	20.07	2.976	20.63	3.117	21.20	3.260	21.75	3.404	22.30	3.552	22.83	3.700	23.37	3.852	23.88	4.004	24.40	4.158	24.90	4.314
2700	9720	20.32	3.196	20.87	3.340	21.42	3.487	21.97	3.635	22.50	3.785	23.02	3.938	23.55	4.092	24.05	4.248	24.57	4.405	25.07	4.565
2800	10080	20.60	3.433	21.13	3.581	21.67	3.730	22.20	3.883	22.73	4.037	23.23	4.193	23.75	4.350	24.25	4.510	24.75	4.671	25.23	4.834
2900	10440	20.88	3.684	21.42	3.835	21.93	3.989	22.45	4.144	22.97	4.301	23.47	4.461	23.97	4.622	24.47	4.785	24.95	4.949	25.43	5.115
3000	10800	21.20	3.953	21.72	4.108	22.22	4.265	22.72	4.424	23.22	4.584	23.72	4.748	24.20	4.912	24.68	5.078	25.17	5.246	25.63	5.416
3100	11160	21.52	4.237	22.02	4.396	22.52	4.555	23.00	4.718	23.48	4.883	23.97	5.049	24.45	5.217	24.93	5.386	25.40	5.557	25.87	5.731

Undersized drive

Oversized drive

Fan performances (continued)

48/50UA-UH 055

48/50UA-UH 055 - Unit with standard static pressure

Air flow		External static pressure, Pa																			
		50		80		110		140		170		200		230		260		290		320	
l/s	m³/h	r/s	kW	r/s	kW	r/s	kW	r/s	kW	r/s	kW	r/s	kW	r/s	kW	r/s	kW	r/s	kW	r/s	kW
2700	9720	12.22	1.310	13.03	1.437	13.83	1.569	14.63	1.707	15.42	1.849	16.18	1.996	16.93	2.147	17.67	2.303	18.40	2.463	19.10	2.625
2850	10260	12.83	1.527	13.60	1.660	14.37	1.799	15.13	1.942	15.88	2.090	16.62	2.243	17.33	2.400	18.05	2.561	18.73	2.725	19.42	2.894
3000	10800	13.47	1.770	14.20	1.910	14.92	2.054	15.65	2.203	16.37	2.357	17.07	2.515	17.75	2.678	18.43	2.845	19.12	3.015	19.77	3.189
3150	11340	14.07	2.034	14.77	2.181	15.47	2.331	16.17	2.486	16.83	2.646	17.52	2.810	18.18	2.978	18.83	3.149	19.48	3.325	20.13	3.504
3300	11880	14.70	2.327	15.37	2.479	16.03	2.637	16.68	2.797	17.35	2.963	18.00	3.132	18.63	3.305	19.27	3.484	19.90	3.664	20.50	3.848
3450	12420	15.32	2.644	15.95	2.802	16.58	2.965	17.22	3.132	17.85	3.303	18.47	3.479	19.08	3.657	19.70	3.840	20.30	4.026	20.90	4.216
3600	12960	15.93	2.991	16.55	3.155	17.15	3.324	17.77	3.497	18.37	3.675	18.97	3.855	19.57	4.039	20.15	4.228	20.73	4.420	21.30	4.616
3750	13500	16.55	3.362	17.13	3.534	17.72	3.708	18.30	3.888	18.88	4.071	19.47	4.257	20.03	4.448	20.60	4.642	21.17	4.840	21.72	5.040
3900	14040	17.15	3.762	17.72	3.939	18.27	4.121	18.83	4.306	19.40	4.495	19.95	4.687	20.50	4.883	21.05	5.082	21.60	5.285	22.13	5.491
4050	14580	17.75	4.195	18.30	4.379	18.85	4.566	19.38	4.757	19.93	4.951	20.47	5.150	21.00	5.351	21.53	5.556	22.05	5.765	22.58	5.977
4200	15120	18.35	4.658	18.88	4.847	19.40	5.040	19.93	5.237	20.45	5.438	20.97	5.642	21.48	5.850	22.00	6.059	22.52	6.274	23.02	6.491
4350	15660	18.97	5.155	19.48	5.351	19.98	5.551	20.48	5.754	21.00	5.960	21.50	6.170	22.00	6.383	22.50	6.600	22.98	6.819	23.48	7.043

48/50UA-UH 055 - Unit with high static pressure H1

Air flow		External static pressure, Pa																			
		100		150		200		250		300		350		400		450		500		550	
l/s	m³/h	r/s	kW	r/s	kW	r/s	kW	r/s	kW	r/s	kW	r/s	kW	r/s	kW	r/s	kW	r/s	kW	r/s	kW
2700	9720	11.00	1.327	12.15	1.552	13.25	1.787	14.28	2.032	15.28	2.284	16.22	2.542	17.12	2.807	17.98	3.077	18.80	3.353	19.58	3.633
2850	10260	11.43	1.522	12.53	1.756	13.58	2.000	14.60	2.256	15.55	2.517	16.47	2.786	17.35	3.061	18.20	3.341	19.00	3.627	19.78	3.917
3000	10800	11.88	1.737	12.93	1.982	13.93	2.237	14.92	2.500	15.85	2.773	16.75	3.051	17.60	3.337	18.43	3.627	19.23	3.923	20.00	4.223
3150	11340	12.32	1.971	13.32	2.225	14.30	2.490	15.23	2.764	16.15	3.045	17.02	3.334	17.87	3.629	18.67	3.930	19.45	4.235	20.20	4.546
3300	11880	12.77	2.229	13.73	2.492	14.67	2.767	15.58	3.050	16.47	3.343	17.32	3.641	18.13	3.946	18.93	4.256	19.70	4.573	18.77	4.893
3450	12420	13.22	2.506	14.13	2.780	15.03	3.063	15.92	3.357	16.77	3.658	17.60	3.966	18.40	4.282	19.18	4.602	19.93	4.928	20.67	5.259
3600	12960	13.67	2.809	14.55	3.092	15.43	3.386	16.28	3.689	17.10	4.000	17.92	4.318	18.70	4.643	19.47	4.974	20.20	5.309	20.92	5.651
3750	13500	14.12	3.134	14.97	3.426	15.82	3.730	16.63	4.043	17.45	4.363	18.23	4.691	18.98	5.025	19.73	5.366	20.47	5.712	21.17	6.063
3900	14040	14.57	3.480	15.38	3.899	16.20	4.095	17.00	4.418	17.78	4.748	18.53	5.085	19.28	5.429	20.02	5.779	20.72	6.135	21.42	6.496
4050	14580	15.02	3.855	15.82	4.167	16.60	4.490	17.37	4.821	18.13	5.161	18.87	5.508	19.60	5.861	20.32	6.221	21.00	6.587	21.68	6.958
4200	15120	15.47	4.255	16.23	4.576	17.00	4.908	17.75	5.250	18.48	5.598	19.20	5.955	19.92	6.318	20.60	6.687	21.28	7.063	21.95	7.444
4350	15660	15.92	4.685	16.67	5.016	17.40	5.358	18.13	5.708	18.85	6.066	19.55	6.432	20.23	6.805	20.92	7.185	21.58	7.569	22.23	7.960

48/50UA-UH 055 - Unit with high static pressure H2

Air flow		External static pressure, Pa																			
		330		360		390		420		450		480		510		540		570		600	
l/s	m³/h	r/s	kW	r/s	kW	r/s	kW	r/s	kW	r/s	kW	r/s	kW	r/s	kW	r/s	kW	r/s	kW	r/s	kW
2700	9720	15.85	2.437	16.40	2.595	16.95	2.753	17.47	2.914	17.98	3.077	18.47	3.241	18.95	3.408	19.43	3.577	19.88	3.747	20.33	3.918
2850	10260	16.12	2.677	15.65	2.840	17.18	3.005	17.70	3.172	18.20	3.341	18.68	3.511	19.17	3.684	19.63	3.859	20.08	4.035	20.53	4.213
3000	10800	16.38	2.939	16.92	3.107	17.43	3.278	17.93	3.452	18.43	3.627	18.92	3.804	19.38	3.982	19.85	4.163	20.30	4.344	20.73	4.529
3150	11340	16.67	3.218	17.18	3.393	17.70	3.570	18.18	3.748	18.67	3.930	19.15	4.113	19.60	4.297	20.07	4.484	20.50	4.672	20.93	4.862
3300	11880	16.97	3.521	17.48	3.701	17.97	3.884	18.45	4.070	18.93	4.256	19.38	4.446	19.85	4.636	20.28	4.829	20.73	5.024	21.15	5.219
3450	12420	17.27	3.842	17.77	4.029	18.25	4.217	18.72	4.409	19.18	4.602	19.63	4.797	20.08	4.993	20.52	5.193	20.95	5.393	21.38	5.595
3600	12960	17.60	4.190	18.07	4.383	18.55	4.577	19.00	4.774	19.47	4.974	19.90	5.174	20.35	5.378	20.77	5.582	21.20	5.789	21.62	5.997
3750	13500	17.92	4.559	18.38	4.757	18.83	4.957	19.28	5.161	19.73	5.366	20.17	5.572	20.60	5.781	21.03	5.992	21.45	6.205	21.85	6.418
3900	14040	18.23	4.949	18.68	5.153	19.13	5.359	19.58	5.568	20.02	5.779	20.45	5.992	20.87	6.206	21.28	6.423	21.68	6.642	22.10	6.862
4050	14580	18.58	5.369	19.02	5.578	19.45	5.790	19.88	6.005	20.32	6.221	20.73	6.440	21.13	6.661	21.55	6.883	21.95	7.108	22.35	7.334
4200	15120	18.92	5.811	19.35	6.027	19.77	6.245	20.18	6.465	20.60	6.687	21.02	6.912	21.42	7.138	21.82	7.367	22.22	7.597	22.60	7.829
4350	15660	19.27	6.285	19.68	6.507	20.10	6.731	20.52	6.957	20.92	7.185	21.32	7.414	21.72	7.647	22.10	7.882	22.50	8.117	22.88	8.355

48/50UA-UH 055 - Unit with high static pressure H3

Air flow		External static pressure, Pa																			
		400		440		480		520		560		600		640		680		720		760	
l/s	m³/h	r/s	kW	r/s	kW	r/s	kW	r/s	kW	r/s	kW	r/s	kW	r/s	kW	r/s	kW	r/s	kW	r/s	kW
2700	9720	17.12	2.730	17.80	2.940	18.47	3.153	19.07	3.353	19.73	3.589	20.33	3.811	20.93	4.036	21.50	4.265	22.05	4.495	22.60	4.729
2850	10260	17.35	2.977	18.03	3.195	18.68	3.416	19.32	3.640	19.93	3.867	20.53	4.097	21.12	4.331	21.68	4.566	22.23	4.804	22.77	5.046
3000	10800	17.60	3.245	18.27	3.471	18.92	3.700	19.53	3.932	20.15	4.167	20.73	4.405	21.32	4.646	21.87	4.890	22.42	5.137	22.95	5.385
3150	11340	17.87	3.530	18.52	3.764	19.15	4.001	19.75	4.241	20.35	4.484	20.93	4.730	21.50	4.978	22.07	5.230	22.60	5.484	23.13	5.741
3300	11880	18.13	3.839	18.77	4.079	19.38	4.324	20.00	4.572	20.58	4.824	21.15	5.077	21.72	5.334	22.27	5.594	22.80	5.855	23.33	6.120
3450	12420	18.40	4.165	19.03	4.413	19.63	4.666	20.23	4.922	20.82	5.181	21.38	5.443	21.93	5.707	22.47	5.974	23.00	6.244	23.52	6.516
3600	12960	18.70	4.517	19.30	4.774	19.90	5.033	20.48	5.298	21.05	5.564	21.62	5.834	22.17	6.106	22.70	6.381	23.22	6.659	23.73	6.939
3750	13500	18.98	4.888	19.58	5.154	20.17	5.421	20.75	5.692	21.30	5.967	21.85	6.244	22.38	6.524	22.92	6.808	23.43	7.093	23.93	7.381
3900	14040	19.28	5.282	19.87	5.554	20.45	5.829	21.00	6.108	21.55	6.391	22.10	6.675	22.62	6.963	23.13	7.254	23.65	7.548	24.15	7.844
4050	14580	19.60	5.702	20.17	5.982	20.73	6.266	21.28	6.553	21.82	6.842	22.35	7.135	22.87	7.430	23.38	7.729	23.88	8.031	24.37	8.335
4200	15120	19.92	6.147	20.47	6.434	21.02	6.724	21.55	7.019	22.08	7.316	22.60	7.616	23.12	7.920	23.62	8.226	24.12	8.535	24.60	8.846
4350	15660	20.23	6.621	20.78	6.915	21.32	7.214	21.85	7.515	22.37	7.820	22.88	8.128	23.38	8.439	23.87	8.753	24.37	9.071	24.83	9.389

Undersized drive
Oversized drive

Fan performances (continued)

48/50UA-UH 065

48/50UA-UH 065 - Unit with standard static pressure

Air flow		External static pressure, Pa																			
		50		85		120		155		190		225		260		295		330		365	
l/s	m³/h	r/s	kW	r/s	kW	r/s	kW	r/s	kW	r/s	kW	r/s	kW	r/s	kW	r/s	kW	r/s	kW	r/s	kW
2700	9720	11.48	1.200	12.43	1.342	13.38	1.494	13.38	1.651	15.23	1.815	16.13	1.986	17.02	2.164	17.87	2.345	18.70	2.533	19.52	2.724
2850	10260	11.82	1.362	13.12	1.575	14.02	1.734	14.02	1.899	15.78	2.070	16.63	2.249	17.48	2.431	18.30	2.621	19.10	2.815	19.88	3.014
3000	10800	12.92	1.671	13.78	1.830	14.63	1.996	14.63	2.168	16.32	2.346	17.13	2.532	17.93	2.723	18.73	2.918	19.50	3.119	20.27	3.324
3150	11340	13.65	1.949	14.47	2.117	15.28	2.290	15.28	2.471	16.88	2.656	17.67	2.849	18.45	3.047	19.22	3.248	19.95	3.457	20.68	3.669
3300	11880	14.37	2.253	15.15	2.428	15.92	2.610	15.92	2.797	17.45	2.991	18.20	3.190	18.95	3.394	19.68	3.604	20.40	3.818	21.12	4.037
3450	12420	15.05	2.582	15.80	2.765	16.55	2.953	16.55	3.149	18.02	3.350	17.07	3.556	19.45	3.767	20.17	3.983	20.85	4.204	21.55	4.430
3600	12960	15.73	2.936	16.45	3.127	17.15	3.324	17.15	3.527	18.57	3.734	19.27	3.947	19.95	4.165	20.63	4.388	21.30	4.616	21.97	4.848
3750	13500	16.40	3.324	17.10	3.522	17.78	3.727	17.78	3.937	19.13	4.151	19.80	4.371	20.47	4.596	21.13	4.826	21.78	5.061	22.42	5.299
3900	14040	17.07	3.739	17.73	3.945	18.38	4.157	18.38	4.375	19.70	4.596	20.33	4.823	20.98	5.055	21.62	5.292	22.25	5.533	22.87	5.779
4050	14580	17.70	4.177	18.33	4.391	18.97	4.610	18.97	4.835	20.23	5.063	20.85	5.297	21.48	5.536	22.08	5.779	22.70	6.027	23.30	6.278
4200	15120	18.33	4.651	18.95	4.872	19.57	5.099	19.57	5.330	20.78	5.567	21.38	5.808	21.98	6.052	22.58	6.303	23.17	6.557	23.75	6.816
4350	15660	18.97	5.155	19.57	5.385	20.15	5.619	20.15	5.857	21.33	6.100	21.92	6.348	22.03	6.397	23.07	6.856	23.65	7.117	24.22	7.382

48/50UA-UH 065 - Unit with high static pressure H1

Air flow		External static pressure, Pa																			
		180		220		260		300		340		380		420		460		500		540	
l/s	m³/h	r/s	kW	r/s	kW	r/s	kW	r/s	kW	r/s	kW	r/s	kW	r/s	kW	r/s	kW	r/s	kW	r/s	kW
2700	9720	12.22	1.566	13.10	1.753	13.95	1.947	13.95	2.146	15.53	2.350	16.28	2.557	17.00	2.769	17.68	2.985	18.35	3.203	19.00	3.425
2850	10260	12.67	1.785	13.50	1.981	14.32	2.183	14.32	2.391	15.85	2.603	16.58	2.818	17.28	3.038	17.97	3.262	18.62	3.489	19.25	3.719
3000	10800	13.08	2.021	13.90	2.226	14.68	2.436	14.68	2.652	16.18	2.872	16.88	3.097	17.57	3.325	18.23	3.557	18.88	3.792	19.50	4.030
3150	11340	13.55	2.288	14.33	2.500	15.08	2.719	15.08	2.943	16.53	3.171	17.22	3.404	17.90	3.641	18.55	3.881	19.17	4.124	19.78	4.371
3300	11880	14.02	2.574	14.77	2.795	15.48	3.022	15.48	3.254	16.88	3.490	17.57	3.732	18.22	3.976	18.85	4.224	19.47	4.477	20.07	4.732
3450	12420	14.47	2.881	15.18	3.110	15.88	3.345	15.88	3.585	17.23	3.830	17.90	4.079	18.53	4.332	19.15	4.589	19.77	4.849	20.35	5.112
3600	12960	14.90	3.209	15.60	3.446	16.28	3.689	16.28	3.937	17.60	4.190	18.23	4.447	18.85	4.708	19.47	4.974	20.05	5.242	20.63	5.514
3750	13500	15.37	3.565	16.03	3.811	16.68	4.061	16.68	4.318	17.97	4.579	18.58	4.844	19.18	5.113	19.78	5.386	20.37	5.663	20.93	5.943
3900	14040	15.82	3.944	16.45	4.198	17.08	4.456	17.08	4.721	18.33	4.990	18.93	5.263	19.52	5.540	20.10	5.822	20.67	6.106	21.22	6.394
4050	14580	16.23	4.341	16.87	4.602	17.48	4.869	17.48	5.140	18.68	5.417	19.27	5.698	19.85	5.984	20.40	6.273	20.97	6.565	21.50	6.861
4200	15120	16.67	4.767	17.28	5.037	17.88	5.311	17.88	5.591	19.05	5.875	19.62	6.164	20.18	6.458	20.73	6.755	21.27	7.056	21.80	7.358
4350	15660	17.12	5.219	17.70	5.497	18.27	5.779	18.27	6.066	19.42	6.359	19.97	6.656	20.52	6.957	21.05	7.261	21.58	7.569	22.10	7.882

48/50UA-UH 065 - Unit with high static pressure H2

Air flow		External static pressure, Pa																			
		260		300		340		380		420		460		500		540		580		620	
l/s	m³/h	r/s	kW	r/s	kW	r/s	kW	r/s	kW	r/s	kW	r/s	kW	r/s	kW	r/s	kW	r/s	kW	r/s	kW
2700	9720	13.95	1.947	14.75	2.146	15.53	2.350	15.53	2.557	17.00	2.769	17.68	2.985	18.35	3.203	19.00	3.425	19.63	3.650	20.23	3.878
2850	10260	14.32	2.183	15.10	2.391	15.85	2.603	15.85	2.818	17.28	3.038	17.97	3.262	18.62	3.489	19.25	3.719	19.87	3.952	20.47	4.188
3000	10800	14.68	2.436	15.45	2.652	16.18	2.872	16.18	3.097	17.57	3.325	18.23	3.557	18.88	3.792	19.50	4.030	20.12	4.272	20.70	4.517
3150	11340	15.08	2.719	15.82	2.943	16.53	3.171	16.53	3.404	17.90	3.641	18.55	3.881	19.17	4.124	19.78	4.371	20.38	4.622	20.97	4.875
3300	11880	15.48	3.022	16.20	3.254	16.88	3.490	16.88	3.732	18.22	3.976	18.85	4.224	17.80	4.477	20.07	4.732	20.65	4.991	21.23	5.252
3450	12420	15.88	3.345	16.57	3.585	17.23	3.830	17.23	4.079	18.53	4.332	19.15	4.589	19.77	4.849	20.35	5.112	20.93	5.379	21.48	5.649
3600	12960	16.28	3.689	16.95	3.937	17.60	4.190	17.60	4.447	18.85	4.708	19.47	4.974	20.05	5.242	20.63	5.514	21.20	5.789	21.75	6.066
3750	13500	16.68	4.061	17.33	4.318	17.97	4.579	17.97	4.844	19.18	5.113	19.78	5.386	20.37	5.663	20.93	5.943	21.48	6.226	22.03	6.513
3900	14040	17.08	4.456	17.72	4.721	18.33	4.990	18.33	5.263	19.52	5.540	20.10	5.822	20.67	6.106	21.22	6.394	21.77	6.685	22.30	6.980
4050	14580	17.48	4.869	18.08	5.140	18.68	5.417	18.68	5.698	19.85	5.984	20.40	6.273	20.97	6.565	21.50	6.861	22.05	7.160	22.57	7.462
4200	15120	17.88	5.311	18.47	5.591	19.05	5.875	19.05	6.164	20.18	6.458	20.73	6.755	21.27	7.056	21.80	7.358	22.33	7.666	22.85	7.976
4350	15660	18.27	5.779	18.85	6.066	19.42	6.359	19.42	6.656	20.52	6.957	21.05	7.261	21.58	7.569	22.10	7.882	22.62	8.196	23.13	8.514

48/50UA-UH 065 - Unit with high static pressure H3

Air flow		External static pressure, Pa																			
		420		460		500		540		580		620		660		700		740		780	
l/s	m³/h	r/s	kW	r/s	kW	r/s	kW	r/s	kW	r/s	kW	r/s	kW	r/s	kW	r/s	kW	r/s	kW	r/s	kW
2700	9720	17.00	2.694	17.68	2.903	18.35	3.115	18.35	3.332	19.63	3.551	20.23	3.772	20.83	3.996	21.40	4.224	21.95	4.454	22.50	4.688
2850	10260	17.28	2.955	17.97	3.173	18.62	3.393	18.62	3.618	19.87	3.844	20.47	4.074	21.05	4.307	21.62	4.543	22.17	4.781	22.72	5.022
3000	10800	17.57	3.234	18.23	3.460	18.88	3.688	18.88	3.920	20.12	4.155	20.70	4.393	21.28	4.634	21.83	4.878	22.38	5.124	22.92	5.372
3150	11340	17.90	3.542	18.55	3.775	19.17	4.012	19.17	4.252	20.38	4.496	20.97	4.742	21.53	4.990	22.08	5.242	22.63	5.497	23.15	5.753
3300	11880	18.22	3.868	18.85	4.110	19.47	4.356	19.47	4.604	20.65	4.854	21.23	5.109	21.78	5.366	22.33	5.626	22.87	5.888	23.38	6.154
3450	12420	18.53	4.214	19.15	4.464	19.77	4.717	19.77	4.973	20.93	5.233	21.48	5.495	22.03	5.760	22.58	6.029	23.10	6.299	23.62	6.572
3600	12960	18.85	4.580	19.47	4.839	20.05	5.099	20.05	5.363	21.20	5.631	21.75	5.902	22.30	6.175	22.83	6.451	23.35	6.729	23.85	7.009
3750	13500	19.18	4.975	19.78	5.240	20.37	5.509	20.37	5.782	21.48	6.057	22.03	6.335	22.57	6.616	23.08	6.901	23.60	7.186	24.10	7.475
3900	14040	19.52	5.389	20.10	5.664	20.67	5.940	20.67	6.220	21.77	6.504	22.30	6.791	22.83	7.080	23.35	7.371	23.85	7.666	24.35	7.963
4050	14580	19.85	5.821	20.40	6.103	20.97	6.387	20.97	6.675	22.05	6.966	22.57	7.260	23.08	7.557	23.60	7.856	24.08	8.159	24.58	8.464
4200	15120	20.18	6.283	20.73	6.571	21.27	6.863	21.27	7.159	22.33	7.458	22.85	7.760	23.35	8.065	23.85	8.372	24.35	8.683	24.83	8.996
4350	15660	20.52	6.767	21.05	7.064	21.58	7.364	21.58	7.667	22.62	7.974	23.13	8.284	23.63	8.595	24.12	8.912	24.60	9.229	25.08	9.550

Undersized drive

Oversized drive

Fan performances (continued)

48/50UA-UH 075

48/50UA-UH 075 - Unit with standard static pressure

Air flow		External static pressure, Pa																			
		50		85		120		155		190		225		260		295		330		365	
l/s	m³/h	r/s	kW	r/s	kW	r/s	kW	r/s	kW	r/s	kW	r/s	kW	r/s	kW	r/s	kW	r/s	kW	r/s	kW
3150	11340	13.65	1.949	14.47	2.117	15.28	2.290	16.08	2.471	16.88	2.656	17.67	2.849	18.45	3.047	19.22	3.248	19.95	3.457	20.68	3.669
3300	11880	14.37	2.253	15.15	2.428	15.92	2.610	16.68	2.797	17.45	2.991	18.20	3.190	18.95	3.394	19.68	3.604	20.40	3.818	21.12	4.037
3450	12420	15.05	2.582	15.80	2.765	16.55	2.953	17.28	3.149	18.02	3.350	18.73	3.556	19.45	3.767	20.17	3.983	20.85	4.204	21.55	4.430
3600	12960	15.73	2.936	16.45	3.127	17.15	3.324	17.87	3.527	18.57	3.734	19.27	3.947	19.95	4.165	20.63	4.388	21.30	4.616	21.97	4.848
3750	13500	16.40	3.324	17.10	3.522	17.78	3.727	18.45	3.937	19.13	4.151	19.80	4.371	20.47	4.596	21.13	4.826	21.78	5.061	22.42	5.299
3900	14040	17.07	3.739	17.73	3.945	18.38	4.157	19.05	4.375	19.70	4.596	20.33	4.823	20.98	5.055	21.62	5.292	22.25	5.533	22.87	5.779
4050	14580	17.70	4.177	18.33	4.391	18.97	4.610	19.60	4.835	20.23	5.063	20.85	5.297	21.48	5.536	22.08	5.779	22.70	6.027	23.30	6.278
4200	15120	18.33	4.651	18.95	4.872	19.57	5.099	20.17	5.330	20.78	5.567	21.38	5.808	21.98	6.052	22.58	6.303	23.17	6.557	23.75	6.816
4350	15660	18.97	5.155	19.57	5.385	20.15	5.619	20.73	5.857	21.33	6.100	21.92	6.348	22.50	6.600	23.07	6.856	23.65	7.117	24.22	7.382
4500	16200	19.57	5.684	20.15	5.921	20.72	6.162	21.28	6.408	21.85	6.657	22.42	6.912	22.98	7.171	23.53	7.434	24.10	7.701	24.65	7.972
4650	16740	20.17	6.246	20.72	6.489	21.27	6.738	21.83	6.990	22.38	7.247	22.92	7.508	23.47	7.773	24.02	8.042	24.55	8.316	25.08	8.593
4800	17280	20.73	6.832	21.28	7.084	21.82	7.338	22.35	7.597	22.88	7.861	23.42	8.129	23.95	8.400	24.47	8.676	25.00	8.956	25.52	9.240

48/50UA-UH 075 - Unit with high static pressure H1

Air flow		External static pressure, Pa																			
		180		220		260		300		340		380		420		460		500		540	
l/s	m³/h	r/s	kW	r/s	kW	r/s	kW	r/s	kW	r/s	kW	r/s	kW	r/s	kW	r/s	kW	r/s	kW	r/s	kW
3150	11340	13.55	2.288	14.33	2.500	15.08	2.719	15.82	2.943	16.53	3.171	17.22	3.404	17.90	3.641	18.55	3.881	19.17	4.124	19.78	4.371
3300	11880	14.02	2.574	14.77	2.795	15.48	3.022	16.20	3.254	16.88	3.490	17.57	3.732	18.22	3.976	18.85	4.224	19.47	4.477	20.07	4.732
3450	12420	14.47	2.881	15.18	3.110	15.88	3.345	16.57	3.585	17.23	3.830	17.90	4.079	18.53	4.332	19.15	4.589	19.77	4.849	20.35	5.112
3600	12960	14.90	3.209	15.60	3.446	16.28	3.689	16.95	3.937	17.60	4.190	18.23	4.447	18.85	4.708	19.47	4.974	20.05	5.242	20.63	5.514
3750	13500	15.37	3.565	16.03	3.811	16.68	4.061	17.33	4.318	17.97	4.579	18.58	4.844	19.18	5.113	19.78	5.386	20.37	5.663	20.93	5.943
3900	14040	15.82	3.944	16.45	4.198	17.08	4.456	17.72	4.721	18.33	4.990	18.93	5.263	19.52	5.540	20.10	5.822	20.67	6.106	21.22	6.394
4050	14580	16.23	4.341	16.87	4.602	17.48	4.869	18.08	5.140	18.68	5.417	19.27	5.698	19.85	5.984	20.40	6.273	20.97	6.565	21.50	6.861
4200	15120	16.67	4.767	17.28	5.037	17.88	5.311	18.47	5.591	19.05	5.875	19.62	6.164	20.18	6.458	20.73	6.755	21.27	7.056	21.80	7.358
4350	15660	17.12	5.219	17.70	5.497	18.27	5.779	18.85	6.066	19.42	6.359	19.97	6.656	20.52	6.957	21.05	7.261	21.58	7.569	22.10	7.882
4500	16200	17.52	5.690	18.10	5.974	18.65	6.264	19.22	6.560	19.77	6.860	20.30	7.164	20.83	7.473	21.37	7.785	21.88	8.101	22.40	8.420
4650	16740	17.93	6.188	18.48	6.479	19.03	6.777	19.57	7.079	20.12	7.386	20.63	7.698	21.17	8.014	21.68	8.334	22.18	8.658	22.68	8.985
4800	17280	18.33	6.703	18.87	7.002	19.40	7.307	19.93	7.617	20.45	7.932	20.97	8.251	21.47	8.574	21.98	8.901	22.48	9.232	22.97	9.566

48/50UA-UH 075 - Unit with high static pressure H2

Air flow		External static pressure, Pa																			
		260		300		340		380		420		460		500		540		580		620	
l/s	m³/h	r/s	kW	r/s	kW	r/s	kW	r/s	kW	r/s	kW	r/s	kW	r/s	kW	r/s	kW	r/s	kW	r/s	kW
3150	11340	15.08	2.645	15.82	2.863	16.53	3.085	17.22	3.311	17.90	3.542	18.55	3.775	19.17	4.012	19.78	4.252	20.38	4.496	20.97	4.742
3300	11880	15.48	2.940	16.20	3.165	16.88	3.395	17.57	3.630	18.22	3.868	18.85	4.110	19.47	4.356	20.07	4.604	20.65	4.854	21.23	5.109
3450	12420	15.88	3.254	16.57	3.487	17.23	3.725	17.90	3.968	18.53	4.214	19.15	4.464	19.77	4.717	20.35	4.973	20.93	5.233	21.48	5.495
3600	12960	16.28	3.588	16.95	3.830	17.60	4.076	18.23	4.326	18.85	4.580	19.47	4.839	20.05	5.099	20.63	5.363	21.20	5.631	21.75	5.902
3750	13500	16.68	3.951	17.33	4.200	17.97	4.454	18.58	4.713	19.18	4.975	19.78	5.240	20.37	5.509	20.93	5.782	21.48	6.057	22.03	6.335
3900	14040	17.08	4.335	17.72	4.593	18.33	4.854	18.93	5.120	19.52	5.389	20.10	5.664	20.67	5.940	21.22	6.220	21.77	6.504	22.30	6.791
4050	14580	17.48	4.736	18.08	5.001	18.68	5.270	19.27	5.544	19.85	5.821	20.40	6.103	20.97	6.387	21.50	6.675	22.05	6.966	22.57	7.260
4200	15120	17.88	5.167	18.47	5.439	19.05	5.716	19.62	5.997	20.18	6.283	20.73	6.571	21.27	6.863	21.80	7.159	22.33	7.458	22.85	7.760
4350	15660	18.27	5.622	18.85	5.902	19.42	6.186	19.97	6.474	20.52	6.767	21.05	7.064	21.58	7.364	22.10	7.667	22.62	7.974	23.13	8.284
4500	16200	18.65	6.095	19.22	6.381	19.77	6.674	20.30	6.970	20.83	7.269	21.37	7.573	21.88	7.881	22.40	8.192	22.90	8.506	23.40	8.823
4650	16740	19.03	6.592	19.57	6.887	20.12	7.186	20.63	7.489	21.17	7.796	21.68	8.108	22.18	8.423	22.68	8.741	23.18	9.063	23.67	9.387
4800	17280	19.40	7.109	19.93	7.411	20.45	7.716	20.97	8.026	21.47	8.342	21.98	8.660	22.48	8.982	22.97	9.307	23.45	9.636	23.93	9.968

48/50UA-UH 075 - Unit with high static pressure H3

Air flow		External static pressure, Pa																			
		420		460		500		540		580		620		660		700		740		780	
l/s	m³/h	r/s	kW	r/s	kW	r/s	kW	r/s	kW	r/s	kW	r/s	kW	r/s	kW	r/s	kW	r/s	kW	r/s	kW
3150	11340	17.90	3.542	18.55	3.775	19.17	4.012	19.78	4.252	20.38	4.496	20.97	4.742	21.53	4.990	22.08	5.242	22.63	5.497	23.15	5.753
3300	11880	18.22	3.868	18.85	4.110	19.47	4.356	20.07	4.604	20.65	4.854	21.23	5.109	21.78	5.366	22.33	5.626	22.87	5.888	23.38	6.154
3450	12420	18.53	4.214	19.15	4.464	19.77	4.717	20.35	4.973	20.93	5.233	21.48	5.495	22.03	5.760	22.58	6.029	23.10	6.299	23.62	6.572
3600	12960	18.85	4.580	19.47	4.839	20.05	5.099	20.63	5.363	21.20	5.631	21.75	5.902	22.30	6.175	22.83	6.451	23.35	6.729	23.85	7.009
3750	13500	19.18	4.975	19.78	5.240	20.37	5.509	20.93	5.782	21.48	6.057	22.03	6.335	22.57	6.616	23.08	6.901	23.60	7.254	24.10	7.475
3900	14040	19.52	5.389	20.10	5.664	20.67	5.940	21.22	6.220	21.77	6.504	22.30	6.791	22.83	7.080	23.35	7.371	23.85	7.666	24.35	7.963
4050	14580	19.85	5.821	20.40	6.103	20.97	6.387	21.50	6.675	22.05	6.966	22.57	7.260	23.08	7.557	23.60	7.856	24.08	8.159	24.58	8.464
4200	15120	20.18	6.283	20.73	6.571	21.27	6.863	21.80	7.159	22.33	7.458	22.85	7.760	23.35	8.065	23.85	8.372	24.35	8.683	24.83	8.996
4350	15660	20.52	6.767	21.05	7.064	21.58	7.364	22.10	7.667	22.62	7.974	23.13	8.284	23.63	8.595	24.12	8.912	24.60	9.229	25.08	9.550
4500	16200	20.83	7.269	21.37	7.573	21.88	7.881	22.40	8.192	22.90	8.506	23.40	8.823	23.88	9.143	24.37	9.466	24.85	9.792	25.32	10.120
4650	16740	21.17	7.796	21.68	8.108	22.18	8.423	22.68	8.741	23.18	9.063	23.67	9.387	24.15	9.714	24.63	10.045	25.10	10.379	25.55	10.714
4800	17280	21.47	8.342	21.98	8.660	22.48	8.982	22.97	9.307	23.45	9.636	23.93	9.968	24.40	10.303	24.87	10.641	25.33	10.982	25.78	11.325

Undersized drive
Oversized drive

Fan performances (continued)

48/50UA-UH 085, 100,120

48/50UA-UH 085, 100, 120 - Unit with standard static pressure

Air flow		External static pressure, Pa																			
		50		85		120		155		190		225		260		295		330		365	
l/s	m³/h	r/s	kW	r/s	kW	r/s	kW	r/s	kW	r/s	kW	r/s	kW	r/s	kW	r/s	kW	r/s	kW	r/s	kW
4250	15300	8.28	1.832	8.92	2.044	9.55	2.262	10.15	2.487	10.73	2.717	11.32	2.954	11.87	3.196	12.42	3.442	12.93	3.692	13.45	3.947
4500	16200	8.77	2.169	9.37	2.391	9.95	2.621	10.52	2.858	11.08	3.099	11.63	3.347	12.17	3.599	12.70	3.857	13.20	4.117	13.70	4.384
4750	17100	9.25	2.546	9.82	2.781	10.37	3.022	10.92	3.270	11.45	3.522	11.98	3.781	12.50	4.045	13.00	4.312	13.48	4.585	13.97	4.861
5000	18000	9.73	2.967	10.27	3.214	10.80	3.467	11.32	3.725	11.83	3.991	12.33	4.259	12.83	4.534	13.32	4.814	13.80	5.096	14.27	5.384
5250	18900	10.22	3.434	10.73	3.694	11.23	3.958	11.73	4.229	12.23	4.504	12.72	4.785	13.18	5.071	13.65	5.360	14.12	5.655	14.57	5.953
5500	19800	10.70	3.951	11.20	4.222	11.68	4.498	12.17	4.780	12.63	5.068	13.10	5.359	13.55	5.656	14.00	5.957	14.45	6.262	14.88	6.572
5750	20700	11.22	4.526	11.68	4.809	12.15	5.097	12.62	5.392	13.07	5.690	13.52	5.994	13.95	6.302	14.38	6.615	14.82	6.931	15.23	7.251
6000	21600	11.72	5.147	12.17	5.443	12.62	5.743	13.05	6.048	13.48	6.359	13.92	6.674	14.35	6.994	14.77	7.318	15.18	7.645	15.58	7.977
6250	22500	12.22	5.834	12.65	6.141	13.08	6.454	13.52	6.771	13.93	7.093	14.35	7.421	14.75	7.752	15.17	8.086	15.57	8.425	15.95	8.769
6500	23400	12.73	6.580	13.15	6.900	13.57	7.225	13.98	7.554	14.38	7.888	14.78	8.226	15.18	8.569	15.57	8.916	15.95	9.267	16.33	9.620
6750	24300	13.25	7.388	13.65	7.720	14.05	8.057	14.45	8.398	14.83	8.744	15.22	9.094	15.60	9.449	15.98	9.807	16.37	10.169	16.73	10.535
7000	25200	13.77	8.260	14.15	8.605	14.53	8.954	14.92	9.307	15.30	9.666	15.67	10.027	16.03	10.393	16.40	10.763	16.77	11.137	17.13	11.515

48/50UA-UH 085, 100, 120 - Unit with high static pressure H1

Air flow		External static pressure, Pa																			
		140		175		210		245		280		315		350		385		420		455	
l/s	m³/h	r/s	kW	r/s	kW	r/s	kW	r/s	kW	r/s	kW	r/s	kW	r/s	kW	r/s	kW	r/s	kW	r/s	kW
4250	15300	9.88	2.390	10.48	2.619	11.07	2.852	11.63	3.092	12.18	3.336	12.72	3.585	13.23	3.837	13.75	4.095	14.23	4.357	14.72	4.622
4500	16200	10.28	2.756	10.85	2.995	11.40	3.240	11.95	3.491	12.47	3.746	12.98	4.005	13.48	4.269	13.98	4.537	14.47	4.809	14.93	5.085
4750	17100	10.68	3.163	11.22	3.413	11.75	3.670	12.27	3.932	12.78	4.197	13.28	4.468	13.77	4.742	14.25	5.021	14.72	5.303	15.17	5.590
5000	18000	11.10	3.614	11.62	3.876	12.12	4.144	12.62	4.416	13.12	4.693	13.60	4.975	14.07	5.260	14.52	5.549	14.98	5.843	15.42	6.140
5250	18900	11.52	4.112	12.02	4.385	12.50	4.664	12.98	4.947	13.45	5.235	13.92	5.528	14.37	5.825	14.82	6.125	15.27	6.429	15.68	6.737
5500	19800	11.95	4.658	12.43	4.944	12.90	5.233	13.37	5.528	13.82	5.827	14.27	6.131	14.70	6.438	15.13	6.750	15.57	7.065	15.98	7.385
5750	20700	12.42	5.265	12.87	5.562	13.32	5.863	13.77	6.169	14.20	6.480	14.63	6.795	15.05	7.114	15.47	7.437	15.88	7.762	16.30	8.092
6000	21600	12.87	5.917	13.30	6.225	13.73	6.539	14.17	6.856	14.58	7.178	15.00	7.504	15.42	7.834	15.82	8.168	16.22	8.506	16.62	8.846
6250	22500	13.33	6.634	13.75	6.955	14.17	7.280	14.58	7.609	14.98	7.943	15.38	8.280	15.78	8.622	16.18	8.966	16.57	9.315	16.95	9.667
6500	23400	13.80	7.412	14.20	7.744	14.62	8.081	15.00	8.422	15.40	8.767	15.78	9.116	16.17	9.468	16.55	9.824	16.93	10.185	17.30	10.548
6750	24300	14.28	8.252	14.67	8.595	15.05	8.944	15.43	9.296	15.82	9.653	16.20	10.014	16.57	10.378	16.93	10.746	17.30	11.117	17.67	11.492
7000	25200	14.75	9.156	15.13	9.512	15.52	9.872	15.88	10.236	16.25	10.604	16.62	10.976	16.98	11.353	17.33	11.731	17.68	12.114	18.03	12.500

48/50UA-UH 085, 100, 120 - Unit with high static pressure H2

Air flow		External static pressure, Pa																			
		220		255		290		325		360		395		430		465		500		535	
l/s	m³/h	r/s	kW	r/s	kW	r/s	kW	r/s	kW	r/s	kW	r/s	kW	r/s	kW	r/s	kW	r/s	kW	r/s	kW
4250	15300	10.70	2.796	11.23	3.027	11.75	3.262	12.25	3.502	12.75	3.744	13.22	3.991	13.70	4.243	14.15	4.497	14.60	4.756	15.03	5.017
4500	16200	11.00	3.171	11.52	3.411	12.02	3.656	12.50	3.905	12.98	4.159	13.45	4.418	13.90	4.679	14.35	4.942	14.78	5.212	15.22	5.483
4750	17100	11.33	3.584	11.83	3.835	12.32	4.092	12.78	4.350	13.25	4.616	13.70	4.884	14.13	5.154	14.57	5.429	15.00	5.709	15.42	5.988
5000	18000	11.68	4.040	12.15	4.301	12.62	4.569	13.07	4.840	13.52	5.112	13.95	5.392	14.38	5.674	14.80	5.958	15.22	6.247	15.62	6.538
5250	18900	12.05	4.541	12.50	4.814	12.95	5.091	13.38	5.371	13.82	5.655	14.23	5.944	14.65	6.238	15.07	6.531	15.47	6.832	15.85	7.132
5500	19800	12.42	5.089	12.85	5.371	13.28	5.660	13.70	5.951	14.12	6.247	14.53	6.545	14.93	6.848	15.33	7.153	15.72	7.463	16.10	7.776
5750	20700	12.80	5.695	13.23	5.988	13.63	6.287	14.05	6.590	14.45	6.895	14.85	7.205	15.23	7.517	15.63	7.834	16.00	8.153	16.38	8.477
6000	21600	13.20	6.343	13.60	6.648	14.00	6.958	14.40	7.270	14.78	7.587	15.17	7.906	15.55	8.230	15.93	8.558	16.30	8.887	16.67	9.223
6250	22500	13.60	7.056	14.00	7.370	14.38	7.692	14.77	8.016	15.15	8.342	15.52	8.673	15.88	9.008	16.25	9.346	16.60	9.686	16.97	10.031
6500	23400	14.02	7.824	14.40	8.151	14.77	8.482	15.15	8.817	15.50	9.155	15.87	9.498	16.23	9.842	16.58	10.192	16.93	10.544	17.27	10.898
6750	24300	14.45	8.652	14.82	8.992	15.17	9.332	15.53	9.679	15.88	10.029	16.23	10.381	16.58	10.737	16.92	11.096	17.27	11.459	17.60	11.823
7000	25200	14.87	9.544	15.23	9.894	15.58	10.245	15.92	10.602	16.27	10.963	16.60	11.327	16.95	11.692	17.28	12.063	17.60	12.436	17.93	12.813

48/50UA-UH 085, 100, 120 - Unit with high static pressure H3

Air flow		External static pressure, Pa																			
		395		430		465		500		535		570		605		640		675		710	
l/s	m³/h	r/s	kW	r/s	kW	r/s	kW	r/s	kW	r/s	kW	r/s	kW	r/s	kW	r/s	kW	r/s	kW	r/s	kW
4250	15300	13.22	3.991	13.70	4.243	14.15	4.497	14.60	4.756	15.03	5.017	15.47	5.282	15.88	5.550	16.28	5.821	16.68	6.093	17.08	6.371
4500	16200	13.45	4.418	13.90	4.679	14.35	4.942	14.78	5.212	15.22	5.483	15.63	5.758	16.03	6.035	16.43	6.317	16.83	6.599	17.22	6.885
4750	17100	13.70	4.884	14.13	5.154	14.57	5.429	15.00	5.709	15.42	5.988	15.82	6.275	16.22	6.562	16.62	6.853	17.00	7.146	17.37	7.442
5000	18000	13.95	5.392	14.38	5.674	14.80	5.958	15.22	6.247	15.62	6.538	16.02	6.834	16.42	7.132	16.80	7.433	17.18	7.736	17.55	8.044
5250	18900	14.23	5.944	14.65	6.238	15.07	6.531	15.47	6.832	15.85	7.132	16.25	7.438	16.63	7.748	17.00	8.058	17.37	8.372	17.73	8.689
5500	19800	14.53	6.545	14.93	6.848	15.33	7.153	15.72	7.463	16.10	7.776	16.48	8.090	16.85	8.409	17.23	8.731	17.58	9.055	17.95	9.383
5750	20700	14.85	7.205	15.23	7.517	15.63	7.834	16.00	8.153	16.38	8.477	16.75	8.803	17.12	9.132	17.47	9.463	17.83	9.798	18.17	10.136
6000	21600	15.17	7.906	15.55	8.230	15.93	8.558	16.30	8.887	16.67	9.223	17.02	9.558	17.37	9.898	17.72	10.238	18.07	10.586	18.42	10.933
6250	22500	15.52	8.673	15.88	9.008	16.25	9.346	16.60	9.686	16.97	10.031	17.32	10.378	17.65	10.728	18.00	11.080	18.33	11.436	18.67	11.795
6500	23400	15.87	9.498	16.23	9.842	16.58	10.192	16.93	10.544	17.27	10.898	17.62	11.254	17.95	11.616	18.28	11.979	18.62	12.345	18.93	12.713
6750	24300	16.23	10.381	16.58	10.737	16.92	11.096	17.27	11.459	17.60	11.823	17.93	12.191	18.25	12.564	18.58	12.937	18.90	13.314	19.22	13.694
7000	25200	16.60	11.327	16.95	11.692	17.28	12.063	17.60	12.436	17.93	12.813	18.25	13.191	18.58	13.573	18.90	13.957	19.20	14.346	19.52	14.736

Undersized drive

Oversized drive

Return air fan performances

Return air fan 2.9 kW

Air flow		External static pressure, Pa																			
		40		70		100		130		160		190		220		250		280		310	
l/s	m³/h	r/s	kW	r/s	kW	r/s	kW	r/s	kW	r/s	kW	r/s	kW	r/s	kW	r/s	kW	r/s	kW	r/s	kW
2000	7200	-	-	-	-	-		11.23	0.753	12.27	0.864	13.27	0.982	14.22	1.104	15.13	1.231	16.00	1.363	16.83	1.497
2250	8100	-	-	-	-	10.57	0.818	11.53	0.931	12.43	1.048	13.42	1.173	14.32	1.302	15.18	1.436	16.03	1.574	16.85	1.716
2500	9000	-	-	-	-	11.05	1.027	11.93	1.145	12.80	1.270	13.67	1.401	14.50	1.536	15.33	1.676	16.13	1.822	16.92	1.972
2750	9900	-	-	10.78	1.155	11.60	1.275	12.40	1.401	13.20	1.532	14.00	1.670	14.78	1.811	15.55	1.958	16.30	2.110	17.05	2.266
3000	10800	10.68	1.315	11.43	1.440	12.18	1.569	12.92	1.702	13.65	1.841	14.38	1.985	15.12	2.133	15.83	2.286	16.55	2.444	17.25	2.607
3250	11700	11.42	1.639	12.12	1.773	12.80	1.910	13.48	2.051	14.17	2.197	14.85	2.348	15.52	2.503	16.20	2.664	16.87	2.829	17.52	2.997
3500	12600	12.17	2.014	12.80	2.158	13.45	2.304	14.08	2.453	14.72	2.607	15.35	2.766	15.98	2.928	16.62	3.094	17.23	3.265	17.85	3.441
3750	13500	12.90	2.445	13.52	2.598	14.12	2.753	14.70	2.912	15.30	3.073	15.90	3.239	16.48	3.409	17.07	3.689	17.67	3.760	18.25	3.943
4000	14400	13.67	2.937	14.23	3.098	14.80	3.262	15.35	3.429	15.92	3.599	16.47	3.773	17.02	3.950	17.58	4.132	18.13	4.317	18.68	4.506
4250	15300	14.43	3.490	14.97	3.662	15.48	3.835	16.02	4.011	16.55	4.190	17.07	4.372	17.60	4.557	18.12	4.747	18.63	4.939	19.15	5.135

Return air fan 4 kW

Air flow		External static pressure, Pa																			
		170		200		230		260		290		320		350		380		410		440	
l/s	m³/h	r/s	kW		kW	r/s	kW	r/s	kW	r/s	kW	r/s	kW	r/s	kW	r/s	kW	r/s	kW	r/s	kW
2500	9000	13.10	1.289	13.95	1.418	14.78	1.553	15.60	1.693	16.40	1.836	17.17	1.984	17.92	2.137	18.65	2.292	19.37	2.450	20.05	2.611
2750	9900	13.47	1.548	14.25	1.685	15.03	1.826	15.80	1.971	16.55	2.122	17.28	2.277	18.02	2.435	18.72	2.597	19.40	2.762	20.08	2.931
3000	10800	13.90	1.854	14.63	1.996	15.35	2.144	16.08	2.295	16.78	2.452	17.48	2.613	18.17	2.777	18.85	2.946	19.50	3.119	20.15	3.294
3250	11700	14.40	2.205	15.07	2.356	15.75	2.510	16.42	2.668	17.08	2.831	17.73	2.998	18.38	3.169	19.03	3.344	19.67	3.523	20.28	3.705
3500	12600	14.93	2.610	15.57	2.767	16.18	2.928	16.82	3.093	17.43	3.262	18.07	3.436	18.68	3.613	19.28	3.795	19.88	3.979	20.48	4.167
3750	13500	15.50	3.070	16.08	3.234	16.68	3.402	17.27	3.574	17.85	3.750	18.43	3.930	19.02	4.114	19.60	4.301	20.17	4.492	20.73	4.688
4000	14400	16.10	3.590	16.65	3.761	17.20	3.937	17.77	4.116	18.32	4.299	18.87	4.485	19.42	4.675	19.95	4.870	20.50	5.067	21.03	5.268
4250	15300	16.72	4.172	17.25	4.351	17.77	4.534	18.28	4.721	18.82	4.911	19.33	5.105	19.85	5.302	20.37	5.503	20.88	5.706	21.38	5.914
4500	16200	17.37	4.820	17.85	5.009	18.35	5.200	18.85	5.394	19.33	5.591	19.83	5.793	20.32	5.997	20.82	6.204	21.30	6.415	21.78	6.629
4750	17100	18.02	5.540	18.50	5.737	18.97	5.936	19.43	6.137	19.90	6.343	20.37	6.551	20.83	6.763	21.30	6.978	21.77	7.195	22.23	7.416

Return air fan 5.5 kW

Air flow		External static pressure, Pa																			
		20		50		80		110		140		170		200		230		260		290	
l/s	m³/h	r/s	kW	r/s	kW	r/s	kW	r/s	kW	r/s	kW	r/s	kW	r/s	kW	r/s	kW	r/s	kW	r/s	kW
3250	11700	-	-	-	-	8.78	1.102	9.55	1.247	10.32	1.399	11.05	1.561	11.77	1.731	12.47	1.910	13.15	2.094	13.82	2.285
3500	12600	-	-	-	-	9.15	1.312	9.88	1.462	10.58	1.622	11.28	1.790	11.97	1.965	12.63	2.148	13.28	2.338	13.92	2.535
3750	13500	-	-	8.85	1.400	9.55	1.551	10.22	1.708	10.88	1.873	11.53	2.047	12.18	2.228	12.82	2.417	13.45	2.613	14.07	2.816
4000	14400	-	-	9.30	1.663	9.95	1.820	10.58	1.984	11.22	2.157	11.83	2.336	12.45	2.524	13.05	2.718	13.65	2.920	14.23	3.127
4250	15300	9.12	1.798	9.75	1.958	10.37	2.123	10.97	2.295	11.55	2.473	12.15	2.660	12.73	2.853	13.30	3.052	13.87	3.260	14.43	3.474
4500	16200	9.62	2.119	10.20	2.288	10.78	2.462	11.35	2.641	11.92	2.826	12.48	3.019	13.03	3.218	13.58	3.424	14.12	3.637	14.67	3.856
4750	17100	10.10	2.478	10.67	2.655	11.22	2.837	11.77	3.024	12.30	3.217	12.83	3.416	13.35	3.622	13.88	3.834	14.40	4.053	14.92	4.278
5000	18000	10.60	2.875	11.13	3.062	11.65	3.252	12.17	3.446	12.68	3.647	13.20	3.854	13.70	4.066	14.20	4.285	14.70	4.509	15.18	4.741
5250	18900	11.08	3.315	11.60	3.509	12.10	3.707	12.60	3.911	13.08	4.118	13.57	4.333	14.05	4.552	14.53	4.777	15.02	5.007	15.48	5.245
5500	19800	11.58	3.796	12.07	4.000	12.55	4.207	13.03	4.418	13.50	4.633	13.97	4.855	14.43	5.082	14.88	5.314	15.35	5.551	15.80	5.794

Undersized drive

Oversized drive

Pressure drop options, Pa

Chassis 1 (50UH 045 and 055)

		Factory-installed options/accessory static pressure correction factor to be added, Pa									
Rooftop air flow rate	**l/s**	**2000**	**2250**	**2500**	**2750**	**3000**	**3250**	**3500**	**3750**	**4000**	**4250**
	m³/h	**7200**	**8100**	**9000**	**9900**	**10800**	**11700**	**12600**	**13500**	**14400**	**15300**
Option 83 - Electric heater		16	19	23	27	32	36	41	46	51	56
Option 84 - Electric heater		16	19	23	27	32	36	41	46	51	56
Option 85 - Electric heater		16	19	23	27	32	36	41	46	51	56
Option 155 - Hot-water coil		58	71	85	100	115	132	150	168	188	208
Option 37 - Hot-water coil		58	71	85	100	115	132	150	168	188	208
Option 90 - Natural gas		22	33	44	55	65	76	87	98	109	120
Option 91 - Natural gas		23	35	47	59	71	83	95	107	119	131
Option 100 - Propane gas		22	33	44	55	65	76	87	98	109	120
Option 101 - Propane gas		23	35	47	59	71	83	95	107	119	131
Option 118 - Fresh-air panel		8	10	13	16	19	22	26	31	35	40
Option 40 - Manual damper		8	10	13	16	19	22	26	31	35	40
Option 35, 36, 156,157 - Economizer		8	10	13	16	19	22	26	31	35	40
Option 145 - G4 filter M1		0	0	0	0	0	0	0	0	0	0
Option 147 - F7 filter M1		27	32	36	41	46	51	56	62	67	73
Option 158 - G4 + F7 filter M1		59	69	80	91	103	115	127	140	153	166
Option 159 - F6 + F7 filter M1		71	84	98	113	128	144	160	177	194	212
ERM fresh air flow rate	**l/s**	**800**	**1100**	**1400**	**1700**	**2000**	**2300**	**2600**	**2900**	**3200**	**3500**
	m³/h	**2880**	**3960**	**5040**	**6120**	**7200**	**8280**	**9360**	**10440**	**11520**	**12600**
Option 160 - ERM filters		16	24	34	44	56	68	82	97	114	132
Option 160 - ERM heat recovery wheel		35	48	62	76	90	105	120	135	150	166
Total option 160		51	73	96	120	146	173	202	232	264	298

Chassis 2 - 50UH 065 and 075

		Factory-installed options/accessory static pressure correction factor to be added, Pa									
Rooftop air flow rate	**l/s**	**2750**	**3000**	**3250**	**3500**	**3750**	**4000**	**4250**	**4500**	**4750**	**5000**
	m³/h	**9900**	**10800**	**11700**	**12600**	**13500**	**14400**	**15300**	**16200**	**17100**	**18000**
Option 84 - Electric heater		27	32	36	41	46	51	56	62	68	74
Option 85 - Electric heater		27	32	36	41	46	51	56	62	68	74
Option 86 - Electric heater		27	32	36	41	46	51	56	62	68	74
Option 37 - Hot water coil		100	115	132	150	168	188	208	229	251	273
Option 38 - Hot water coil		100	115	132	150	168	188	208	229	251	273
Option 91 - Natural gas		59	71	83	95	107	119	131	143	155	167
Option 92 - Natural gas		63	77	90	103	116	129	142	155	168	181
Option 101 - Propane gas		59	71	83	95	107	119	131	143	155	167
Option 102 - Propane gas		63	77	90	103	116	129	142	155	168	181
Option 118 - Fresh air panel		16	19	22	26	31	35	40	45	50	56
Option 40 - Manual damper		16	19	22	26	31	35	40	45	50	56
Option 35, 36, 156, 157 - Economizer		16	19	22	26	31	35	40	45	50	56
Option 145 - G4 filter M1		0	0	0	0	0	0	0	0	0	0
Option 147 - F7 filter M1		41	46	51	56	62	67	73	78	84	90
Option 158 - G4 + F7 filter M1		91	103	115	127	140	153	166	180	194	208
Option 159 - F6 + F7 filter M1		113	128	144	160	177	194	212	230	249	268
ERM fresh air flow rate	**l/s**	**800**	**1100**	**1400**	**1700**	**2000**	**2300**	**2600**	**2900**	**3200**	**3500**
	m³/h	**2880**	**3960**	**5040**	**6120**	**7200**	**8280**	**9360**	**10440**	**11520**	**12600**
Option 160 - ERM filters		16	24	34	44	56	68	82	97	114	132
Option 160 - ERM heat recovery wheel		35	48	62	76	90	105	120	135	150	166
Total option 160		51	73	96	120	146	173	202	232	264	298

Pressure drop options, Pa (continued)

Chassis 3 - 50UH 085, 100 and 120

		Factory-installed options/accessory static pressure correction factor to be added, Pa									
Rooftop air flow rate	**l/s**	**4300**	**4600**	**4900**	**5200**	**5500**	**5800**	**6100**	**6400**	**6700**	**7000**
	m³/h	**15480**	**16560**	**17640**	**18720**	**19800**	**20880**	**21960**	**23040**	**24120**	**25200**
Option 85 - Electric heater		59	64	68	72	76	81	85	89	94	98
Option 86 - Electric heater		59	64	68	72	76	81	85	89	94	98
Option 87 - Electric heater		59	64	68	72	76	81	85	89	94	98
Option 38 - Hot water coil		66	74	82	91	100	109	119	129	139	150
Option 39 - Hot water coil		66	74	82	91	100	109	119	129	139	150
Option 93 - Natural gas		59	72	85	97	110	123	135	148	161	174
Option 94 - Natural gas		62	76	90	104	118	132	146	160	174	188
Option 95 - Natural gas		65	81	96	112	127	143	158	174	190	205
Option 103 - Propane gas		59	72	85	97	110	123	135	148	161	174
Option 104 - Propane gas		62	76	90	104	118	132	146	160	174	188
Option 105 - Propane gas		65	81	96	112	127	143	158	174	190	205
Option 118 - Fresh air panel		34	40	46	54	62	71	80	90	101	113
Option 40 - Manual damper		34	40	46	54	62	71	80	90	101	113
Option 35, 36, 156, 157 - Economizer		34	40	46	54	62	71	80	90	101	113
Option 145 - G4 filter M1		0	0	0	0	0	0	0	0	0	0
Option 147 - F7 filter M1		44	48	52	56	60	65	69	73	78	82
Option 158 - G4 + F7 filter M1		98	106	115	125	134	143	153	163	173	183
Option 159 - F6 + F7 filter M1		119	132	144	158	171	185	199	213	228	243
ERM fresh air flow rate	**l/s**	**500**	**1000**	**1500**	**2000**	**2500**	**3000**	**3500**	**4000**	**4500**	**5000**
	m³/h	**1800**	**3600**	**5400**	**7200**	**9000**	**10800**	**12600**	**14400**	**16200**	**18000**
Option 160 - ERM filters		5	13	22	32	43	56	70	86	103	122
Option 160 - ERM heat recovery wheel		14	29	44	60	75	92	108	125	143	161
Total option 160		20	42	66	91	118	147	178	211	246	283

Gas heaters

48UA/UH 045-120

48UA/UH	Gas heater	Gas type	Net heat input (min./max.), kW	Output (min./max.), kW	No. of steps
045	Option 90	Natural gas	35.4/52.6	30.8/46.8	2
	Option 91	Natural gas	48.6/69.4	41.8/61.8	2
	Option 100	Propane gas	59.1	53.2	1
	Option 101	Propane gas	71.0	63.9	1
055	Option 90	Natural gas	35.4/52.6	30.8/46.8	2
	Option 91	Natural gas	48.6/69.4	41.8/61.8	2
	Option 100	Propane gas	59.1	53.2	1
	Option 101	Propane gas	71.0	63.9	1
065	Option 91	Natural gas	48.6/69.4	41.8/61.8	2
	Option 92	Natural gas	56.7/81.0	49.9/72.9	2
	Option 101	Propane gas	71.0	63.9	1
	Option 102	Propane gas	82.8	74.5	1
075	Option 91	Natural gas	48.6/69.4	41.8/61.8	2
	Option 92	Natural gas	56.7/81.0	49.9/72.9	2
	Option 101	Propane gas	71.0	63.9	1
	Option 102	Propane gas	82.8	74.5	1
085	Option 93	Natural gas	35.4/68.4/105.2	30.8/59.5/93.6	3
	Option 94	Natural gas	48.6/97.2/138.8	42.8/85.5/125.0	3
	Option 103	Propane gas	59.1/118.2	52.6/105.2	2
	Option 104	Propane gas	71.0/142.0	63.9/127.8	2
100	Option 93	Natural gas	35.4/68.4/105.2	30.8/59.5/93.6	3
	Option 94	Natural gas	48.6/97.2/138.8	42.8/85.5/125.0	3
	Option 103	Propane gas	59.1/118.2	52.6/105.2	2
	Option 104	Propane gas	71.0/142.0	63.9/127.8	2
120	Option 94	Natural gas	48.6/97.2/138.8	42.8/85.5/125.0	3
	Option 95	Natural gas	56.7/113.4/162.0	50.5/99.8/147.4	3
	Option 104	Propane gas	71.0/142.0	63.9/127.8	2
	Option 105	Propane gas	82.8/165.6	75.3/150.7	2

Gas heaters (continued)

Heating modules		5 cells	6 cells	7 cells	5+5 cells	6+6 cells	7+7 cells
Natural gas heating		**Option 90**	**Option 91**	**Option 92**	**Option 93**	**Option 94**	**Option 95**
Net heat input (min./max.)	kW	35.4/52.6	48.6/69.4	56.7/81.0	35.4/105.2	48.6/138.8	56.7/162.0
Heat output (min./max.)	kW	30.8/46.8	41.8/61.8	49.9/72.9	30.8/93.6	42.8/125.0	50.5/147.4
Natural gas (G20) rate*	l/s	1.04/1.55	1.43/2.04	1.67/2.38	1.04/3.09	1.43/4.08	1.67/4.76
	m^3/h	3.74/5.57	5.14/7.34	6.00/8.57	3.74/11.13	5.14/14.7	6.00/17.14
Natural gas (G25) rate*	l/s	1.21/1.80	1.66/2.37	1.94/2.77	1.21/3.60	1.66/4.74	1.94/5.54
	m^3/h	4.36/6.47	5.98/8.54	6.98/9.97	4.36/12.95	5.98/17.08	6.97/19.94
Natural gas (G25.1) rate*	l/s	1.21/1.79	1.66/2.37	1.94/2.77	1.21/3.59	1.66/4.74	1.93/5.54
	m^3/h	4.34/6.46	5.97/8.53	5.97/9.96	4.34/12.94	5.97/17.07	6.96/19.93
Injectors							
Quantity		5	6	7	10	12	14
Size	mm	3.26	3.45	3.45	3.26	3.45	3.45
Propane gas heating		**Option 100**	**Option 101**	**Option 102**	**Option 103**	**Option 104**	**Option 105**
Net heat input (min./max.)	kW	-/59.1	-/71.0	-/82.8	59.1 /118.2	71.0/142.0	82.8/165.6
Heat output (min./max.)	kW	-/53.2	-/63.9	-/74.5	52.6/105.2	63.9/127.8	75.3/150.7
Propane gas (G31) rate*	kg/h	-/4.59	-/5.51	-/6.43	4,59/9.18	5.51/11.03	6,43/12.86
	l/s	-/0.67	-/0.81	-/0.94	0.67/1.34	0.81/1.61	0.94/1.88
	m^3/h	-/2.42	-/2.90	-/3.39	2.42/4.83	2.90/5.81	3.39/6.77
Injectors							
Quantity		5	6	7	10	12	14
Size	mm	1.9	1.9	1.9	1.9	1.9	1.9
Weight	kg	65	73	80	135	150	165
Power consumption (400 V-3 ph-50 Hz)	kW	0.22	0.22	0.22	0.44	0.44	0.44
Gas connection (female)	in	Rp 3/4	Rp 3/4	Rp 3/4	Rp 3/4	Rp 3/4	Rp 3/4

* Natural gas G20 net calorific value 34.02 MJ/m^3 at 15°C, 1013.25 mbar
Natural gas G25 net calorific value 29.25 MJ/m^3 at 15°C, 1013.25 mbar
Natural gas G25.1 net calorific value 29.3 MJ/m^3 at 15°C, 1013.25 mbar
Propane gas G31 net calorific value 46.34 MJ/kg at 15°C, 1013.25 mbar
Propane gas G31 net calorific value 88.0 MJ/m^3 at15°C, 1013.25 mbar

Electric heaters, 50UA/UH

50UA/UH	Nominal power supply, V-ph-Hz	Electric heater	Nominal heat output, kW	Minimum/maximum heat output, kW	Rated current, A	No. of steps
045 (1 stage heating)	400-3-50	Option 83	18.0	9.0/18.0	26.0	2
		Option 84	27.0	18.0/27.0	39.0	2
		Option 85	36.0	18.0/36.0	52.0	2
055 (1 stage heating)	400-3-50	Option 83	18.0	9.0/18.0	26.0	2
		Option 84	27.0	18.0/27.0	39.0	2
		Option 85	36.0	18.0/36.0	52.0	2
065 (2 stages heating)	400-3-50	Option 84	27.0	18.0/27.0	39.0	2
		Option 85	36.0	18.0/36.0	52.0	2
		Option 86	54.0	27.0/54.0	77.9	2
075 (2 stages heating)	400-3-50	Option 84	27.0	18.0/27.0	39.0	2
		Option 85	36.0	18.0/36.0	52.0	2
		Option 86	54.0	27.0/54.0	77.9	2
085 (2 stages heating)	400-3-50	Option 85	36.0	18.0/36.0	52.0	2
		Option 86	54.0	27.0/54.0	77.9	2
		Option 87	72.0	36.0/72.0	103.9	2
100 (3 stages heating)	400-3-50	Option 85	36.0	18.0/36.0	52.0	2
		Option 86	54.0	27.0/54.0	77.9	2
		Option 87	72.0	36.0/72.0	103.9	2
120 (4 stages heating)	400-3-50	Option 85	36.0	18.0/36.0	52.0	2
		Option 86	54.0	27.0/54.0	77.9	2
		Option 87	72.0	36.0/72.0	103.9	2

Hot-water coil - capacity vs EWT and temperature rise

50UA/UH 045 and 055

60 kW coil

Air flow rate		Capacity	Leaving dry-bulb temp.	Air pressure drop	Water flow rate		Water pressure drop
l/s	m³/h	kW	°C	Pa	l/s	m³/h	kPa
2000	7 200	62.2	38.80	58	0.743	2.674	12
2120	7 632	63.1	37.71	64	0.754	2.713	12
2240	8 064	64.0	36.71	70	0.764	2.752	12
2360	8 496	64.9	35.81	77	0.775	2.789	13
2480	8 928	65.7	34.99	84	0.785	2.825	13
2600	9 360	66.5	34.23	91	0.794	2.860	13
2720	9 792	67.3	33.54	98	0.804	2.894	14
2840	10 224	68.0	32.89	105	0.813	2.926	14
2960	10 656	68.8	32.28	113	0.821	2.957	14
3080	11 088	69.5	31.72	121	0.830	2.987	14
3200	11 520	70.1	31.19	129	0.838	3.016	15
3320	11 952	70.8	30.69	137	0.845	3.043	15
3440	12 384	71.4	30.22	145	0.853	3.069	15
3560	12 816	72.0	29.78	154	0.859	3.094	15
3680	13 248	72.5	29.35	163	0.866	3.118	15
3800	13 680	73.0	28.95	172	0.872	3.140	16
3920	14 112	73.5	28.57	181	0.878	3.161	16
4040	14 544	74.0	28.20	191	0.884	3.181	16
4160	14 976	74.4	27.85	201	0.889	3.200	16

50UA/UH 065 and 075

60 kW coil

Air flow rate		Capacity	Leaving dry-bulb temp.	Air pressure drop	Water flow		Water pressure drop
l/s	m³/h	kW	°C	Pa	l/s	m³/h	kPa
2700	9 720	67.2	33.65	97	0.802	2.888	14
2820	10 152	67.9	32.99	104	0.811	2.921	14
2940	10 584	68.7	32.38	111	0.820	2.952	14
3060	11 016	69.4	31.81	119	0.828	2.982	14
3180	11 448	70.0	31.28	127	0.836	3.011	15
3300	11 880	70.7	30.77	135	0.844	3.039	15
3420	12 312	71.3	30.30	144	0.851	3.065	15
3540	12 744	71.9	29.85	152	0.858	3.090	15
3660	13 176	72.4	29.42	161	0.865	3.114	15
3780	13 608	72.9	29.02	170	0.871	3.137	16
3900	14 040	73.4	28.63	180	0.877	3.158	16
4020	14 472	73.9	28.26	189	0.883	3.178	16
4140	14 904	74.3	27.91	199	0.888	3.197	16
4260	15 336	74.8	27.57	209	0.893	3.215	16
4380	15 768	75.1	27.24	219	0.898	3.231	16
4500	16 200	75.5	26.93	229	0.902	3.246	16
4620	16 632	75.8	26.62	240	0.906	3.260	17
4740	17 064	76.1	26.33	251	0.909	3.273	17
4860	17 496	76.4	26.05	262	0.912	3.285	17

50UA/UH 065 and 075

100 kW coil

Air flow rate		Capacity	Leaving dry-bulb temp.	Air pressure drop	Water flow		Water pressure drop
l/s	m³/h	kW	°C	Pa	l/s	m³/h	kPa
2700	9 720	96.7	42.73	97	1.155	4.158	18
2820	10 152	98.7	42.06	104	1.179	4.245	19
2940	10 584	100.7	41.42	111	1.202	4.328	19
3060	11 016	102.5	40.79	119	1.224	4.406	20
3180	11 448	104.2	40.19	127	1.244	4.480	21
3300	11 880	105.8	39.61	135	1.264	4.549	21
3420	12 312	107.3	39.04	144	1.282	4.614	22
3540	12 744	108.7	38.49	152	1.298	4.674	22
3660	13 176	110.0	37.95	161	1.314	4.730	23
3780	13 608	111.2	37.42	170	1.328	4.782	23
3900	14 040	112.3	36.90	180	1.341	4.829	23
4020	14 472	113.3	36.39	189	1.353	4.871	24
4140	14 904	114.2	35.89	199	1.364	4.909	24
4260	15 336	115.0	35.40	209	1.373	4.943	24
4380	15 768	115.6	34.91	219	1.381	4.972	25
4500	16 200	116.2	34.43	229	1.388	4.997	25
4620	16 632	116.7	33.96	240	1.394	5.017	25
4740	17 064	117.0	33.50	251	1.398	5.033	25
4860	17 496	117.3	33.03	262	1.401	5.044	25

EWT Entering water temperature
Note: Based on 90°C entering water temperature, 20 K water temperature rise, 13°C entering air temperature

Hot-water coil - capacity vs EWT and temperature rise

50UA/UH 085, 100 and 120

130 kW coil

Air flow rate l/s	m³/h	Capacity kW	Leaving dry-bulb temp. °C	Air pressure drop Pa	Water flow l/s	m³/h	Water pressure drop kPa
4400	15 840	157.8	42.77	68	1.885	6.785	36
4530	16 308	159.8	42.27	72	1.908	6.870	37
4660	16 776	161.7	41.80	75	1.931	6.952	38
4790	17 244	163.5	41.34	79	1.953	7.032	38
4920	17 712	165.3	40.89	82	1.974	7.108	39
5050	18 180	167.0	40.45	86	1.995	7.181	40
5180	18 648	168.6	40.02	90	2.014	7.251	40
5310	19 116	170.2	39.60	94	2.033	7.319	41
5440	19 584	171.7	39.20	98	2.051	7.383	42
5570	20 052	173.1	38.80	102	2.068	7.444	42
5700	20 520	174.5	38.41	106	2.084	7.502	43
5830	20 988	175.8	38.02	110	2.099	7.558	43
5960	21 456	177.0	37.65	114	2.114	7.610	44
6090	21 924	178.1	37.28	118	2.128	7.659	45
6220	22 392	179.2	36.91	123	2.140	7.705	45
6350	22 860	180.2	36.55	127	2.152	7.749	45
6480	23 328	181.1	36.20	131	2.164	7.789	46
6610	23 796	182.0	35.85	136	2.174	7.826	46
6740	24 264	182.8	35.51	140	2.183	7.860	47

EWT Entering water temperature
Note: Based on 90°C entering water temperature, 20 K water temperature rise, 13°C entering air temperature

Correction factors

Water temp. rise, K	Entering water temperature,°C	Entering air temperature, °C 0	5	10	15	20	25	30
10	50	0.490	0.451	0.405	0.351	0.289	0.220	0.143
	60	0.861	0.785	0.699	0.603	0.498	0.382	0.256
	70	1.086	1.004	0.906	0.793	0.665	0.521	0.363
	80	1.167	1.108	1.025	0.920	0.791	0.639	0.465
	90	1.154	1.118	1.057	0.984	0.876	0.735	0.561
20	50	0.250	0.242	0.225	0.201	0.170	0.130	0.084
	60	0.694	0.633	0.563	0.485	0.399	0.303	0.200
	70	0.992	0.909	0.814	0.706	0.586	0.454	0.310
	80	1.145	1.070	0.977	0.864	0.733	0.583	0.415
	90	1.153	1.117	1.052	0.960	0.839	0.690	0.514

Ethylene glycol derating factors

Percentage	Capacity derating factor	WPD derating factor
10	0.990	1.019
20	0.978	1.039
30	0.962	1.061
35	0.952	1.073

Propylene glycol derating factors

Percentage	Capacity derating factor	WPD derating factor
10	0.980	1.032
20	0.954	1.070
30	0.924	1.112
35	0.908	1.134

WPD Water pressure drop

Operating limits

Cooling mode		
Zone	Air temperature, °C	
	Dry bulb	Wet bulb
Indoor		
Minimum	+18	+13
Maximum	+35	+23
Outdoor		
Minimum	+10	-
Maximum	+48	-

Heat pump mode		
Zone	Air temperature, °C	
	Dry bulb	Wet bulb
Indoor		
Minimum	+10	-
Maximum	+27	-
Outdoor		
Minimum	-10	-11
Maximum	+22	+18

Minimum and maximum air flow rates

50UH	Minimum		Maximum	
	l/s	m³/h	l/s	m³/h
045	2022	7 279	3033	10 919
055	2755	9 918	4132	14 875
065	2777	9 997	4166	14 998
075	3155	11 358	4732	17 035
085	4440	15 984	6660	23 976
100	4440	15 984	6660	23 976
120	4440	15 984	6660	23 976

Sound rating data

48/50UA-UH	Outdoor sound power level at 50 Hz, dB						
	Global dB(A)	125	250	500	1000	2000	4000
045	86.5	89.3	89.5	81.3	81.9	77.0	72.1
055	84.4	87.1	88.9	79.5	77.7	74.7	70.3
065	90.6	92.3	94.5	86.3	85.2	80.0	75.0
075	90.6	92.3	94.5	86.3	85.4	80.1	74.6
085	90.7	92.3	94.5	86.3	85.4	80.5	75.1
100	91.0	92.3	94.5	86.4	85.9	81.1	76.3
120	91.3	92.3	94.5	86.4	86.5	81.8	77.0

48/50UA-UH	Indoor sound power level, supply side at 50 Hz, dB						
	Global dB(A)	125	250	500	1000	2000	4000
045	80.9	78.9	77.1	74.2	75.7	75.2	72.1
055	85.6	81.6	82.6	78.2	79.7	80.2	77.5
065	86.0	81.6	83.2	78.6	80.0	80.6	78.0
075	87.7	82.8	84.9	80.2	81.4	82.5	79.9
085	87.7	87.2	82.5	83.0	81.5	81.5	79.9
100	87.7	87.2	82.5	83.0	81.5	81.5	79.9
120	88.1	87.4	84.2	83.0	82.2	81.7	80.6

48/50UA-UH	Indoor sound power level, return side at 50 Hz, dB						
	Global dB(A)	125	250	500	1000	2000	4000
045	79.3	79.0	76.9	74.4	74.3	72.4	70.1
055	84.2	81.4	82.5	78.7	78.9	77.7	75.2
065	84.6	81.5	83.1	79.1	79.2	78.2	75.7
075	86.4	82.4	85.0	80.7	80.8	80.2	77.6
085	86.0	87.4	82.5	82.7	79.4	78.8	78.4
100	86.0	87.4	82.5	82.7	79.4	78.8	78.4
120	86.6	87.7	84.2	82.8	81.1	79.0	79.1

Physical data, energy recovery module (ERM)

ERM		13	18
Weight (with ducts)	kg	520 (580)	700 (765)
Air flow			
Maximum	l/s - m³h	3472 - 12500	5000 - 18000
Minimum	l/s - m³h	925 - 3330	1344 - 4840
Unit thermal efficiency*			
At maximum air flow	%	63.0	63.0
At minimum air flow	%	84.5	84.5
Unit external static pressure at max. air flow	Pa	350	350
Rooftop size compatibility		**045-075**	**085-120**
Energy recovery heat exchanger		Condensation heat recovery wheel, performance Eurovent-certified	
Heat exchanger performance certification		Eurovent certified	
Wheel diameter	mm	1450	1750
Speed		Constant	
Maximum pressure loss	Pa	165	183
Motor IP level		IP54	IP54
Motor power	W	180	180
Exhaust air fan		One plug fan	
Fan diameter	mm	500	630
Drive		Frequency inverter	
Motor power kW 4 5,5	kW	4	5.5
Motor insulation class		F	F
Filters		Filter class G4 (EN 779)	
Number of filters		4	6
Filter size (length x height x thickness)	mm	595 x 495 x 50	595 x 495 x 50
Control		Pro-Dialog+	
Operating limits			
Maximum outdoor temperature	°C	48	48
Minimum outdoor temperature	°C	-10	-10
Connection to rooftop unit		With insulated duct (factory-supplied and field-installed by the customer). Power and control wiring factory-supplied with duct kit (field-installed by the customer)	
Dimensions			
Width x length (with fresh air hood) x height	mm	1646 x 1606 (1959) x 1792	1965 x 1773 (2198) x 2075

* Thermal efficiency of supply air at 2 m/s with the effect of supply air fan, outside air -10°C, extract air 22°C/50%.

Electrical data, energy recovery module (ERM)

Energy recovery module		13	18
Power circuit			
Nominal power supply	V-ph-Hz	400-3-50 + neutral	400-3-50 + neutral
Voltage range	V	360-440	360-440
Maximum unit power input	kW	4.72	6.40
Full load current	A	8.2	11.3
Nominal unit current draw	A	9.5	12.0
Maximum unit current draw	A	10.9	13.9
Maximum supply cable size	mm²	4	4
Main switch	A	Same as rooftop main switch	
Recommended fuse protection, power circuit	A	16	16
Control circuit power	V	24	24

Exhaust fan performances, energy recovery module (ERM)

ERM	Air flow		50 Pa		100 Pa		150 Pa		200 Pa	
			Max. fan power input	Fan speed	Max. fan power input	Fan speed	Max. fan power input	Fan speed	Max. fan power input	Fan speed
	l/s	m³/h	kW	r/s	kW	r/s	kW	r/s	kW	r/s
13	925	3330	-	-	-	-	-	-	-	-
	1378	4960	-	-	0.35	15.02	0.42	16.02	0.5	16.98
	2067	7440	0.76	19.43	0.84	20.15	0.94	20.87	1.03	21.57
	2755	9920	1.62	25.07	1.73	25.60	1.84	26.15	1.96	26.68
	3472	12500	3.07	30.98	3.2	31.42	3.33	31.85	3.47	32.27
18	1344	4840	-	-	-	-	-	-	-	-
	2222	8000	-	-	0.6	12.47	0.72	13.25	0.85	14.00
	3333	12000	1.32	16.25	1.46	16.80	1.61	17.35	1.76	17.90
	4444	16000	2.84	20.97	3.01	21.38	3.19	21.80	3.38	22.22
	5000	18000	3.92	23.35	4.11	23.72	4.31	24.10	4.51	24.47

ERM	Air flow		250 Pa		300 Pa		350 Pa	
			Max. fan power input	Fan speed	Max. fan power input	Fan speed	Max. fan power input	Fan speed
	l/s	m³/h	kW	r/s	kW	r/s	kW	r/s
13	925	3330	0.4	15.68	0.48	16.75	0.58	17.77
	1378	4960	0.59	17.92	0.69	18.82	0.79	19.68
	2067	7440	1.14	22.25	1.24	22.93	1.36	23.60
	2755	9920	2.08	27.22	2.2	27.75	2.33	23.67
	3472	12500	3.61	32.70	3.75	33.13	3.9	33.57
18	1344	4840	0.58	12.37	0.72	13.25	0.86	14.08
	2222	8000	0.98	14.73	1.13	15.43	1.29	16.12
	3333	12000	1.93	18.43	2.1	18.95	2.27	19.47
	4444	16000	3.57	22.63	3.77	23.05	3.98	23.45
	5000	18000	4.72	24.83	4.93	25.20	5.15	25.57

Dimensions, energy recovery module (ERM), mm

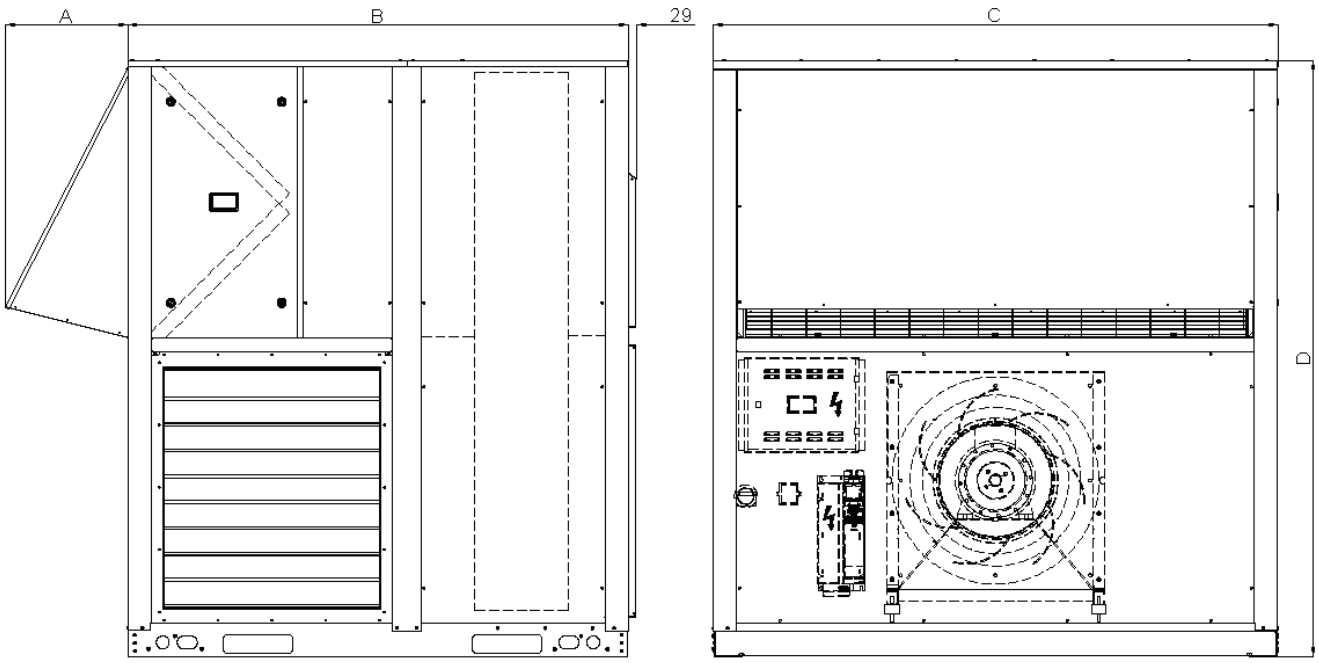

Unit size		A	B	C	D
ERM 13	mm	353	1577	1646	1792
ERM 18	mm	425	1744	1965	2076

Schematic diagram, energy recovery module with control

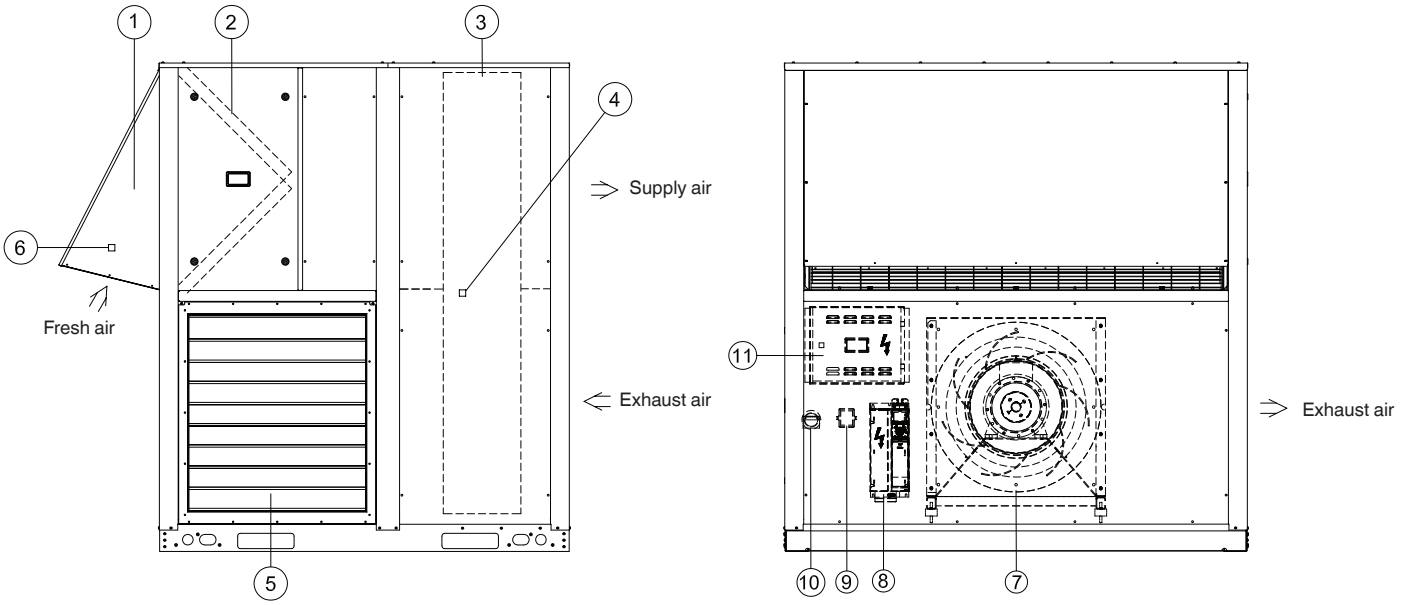

Legend

1 Fresh air inlet hood
2 Filter
3 Heat recovery wheel
4 Motion sensor
5 Barometric exhaust
6 Enthalpy sensor (options 36 and 157)
7 Exhaust air fan
8 Inverter
9 Air pressure sensor
10 Dirty-filter switch (options 96 and 162)
11 Control box

Operating mode, energy recovery module (ERM)

In the following table the component status is given according to the operating mode.

Mode	Rootop unit indoor fan	ERM exhaust fan	Heat recovery wheel	Economizer
1 - Recirculation	On	Off	Off	100% closed
2 - Recovery	On	On (min.)	On	Minimum
3 - Free cooling	On	On (max.)	Off	100% open

Step 1: recirculation mode

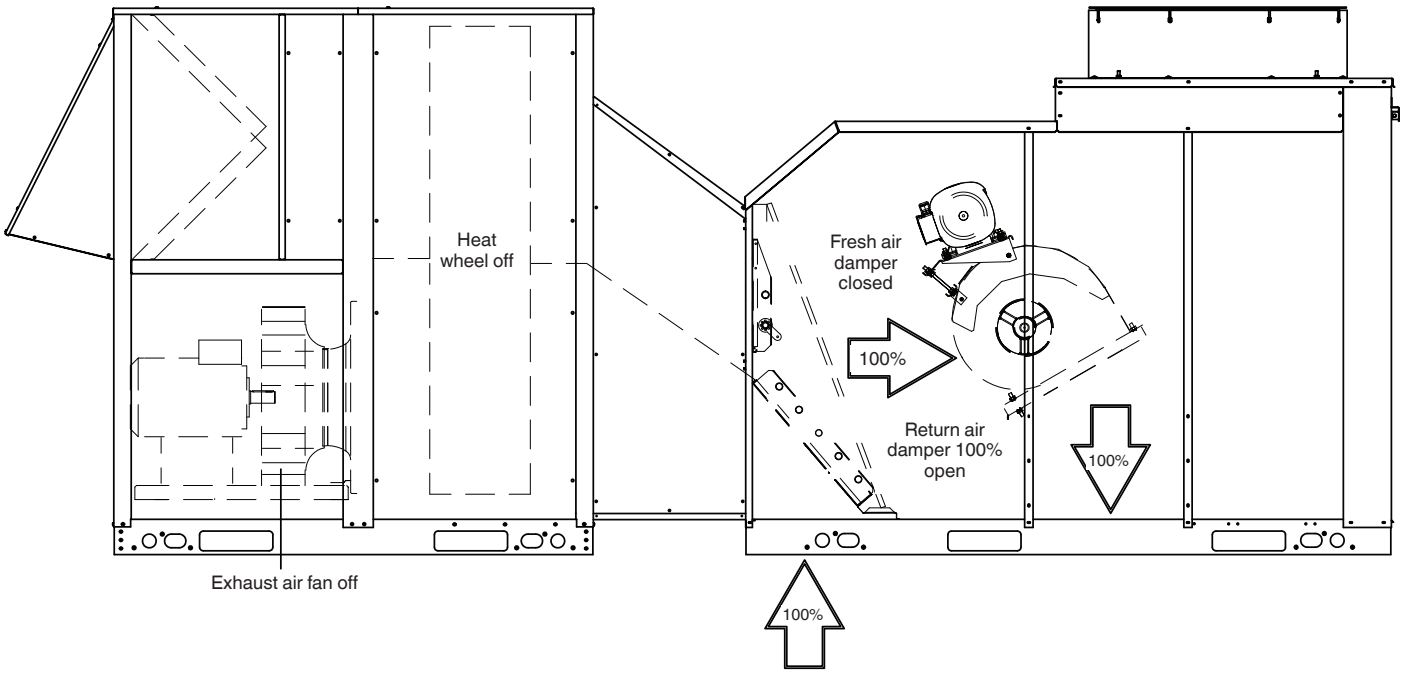

Operating mode, energy recovery module (ERM) (continued)

Step 2: Energy recovery mode

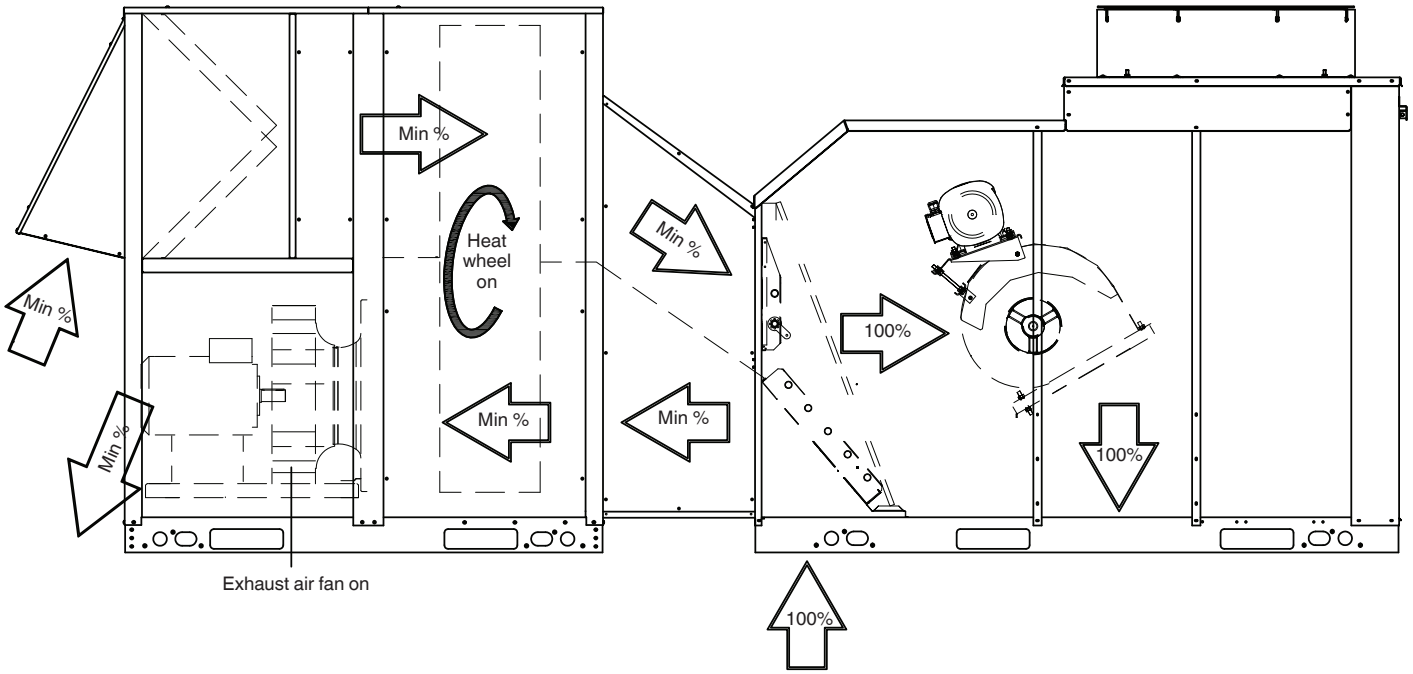

Step 3: Free-cooling mode

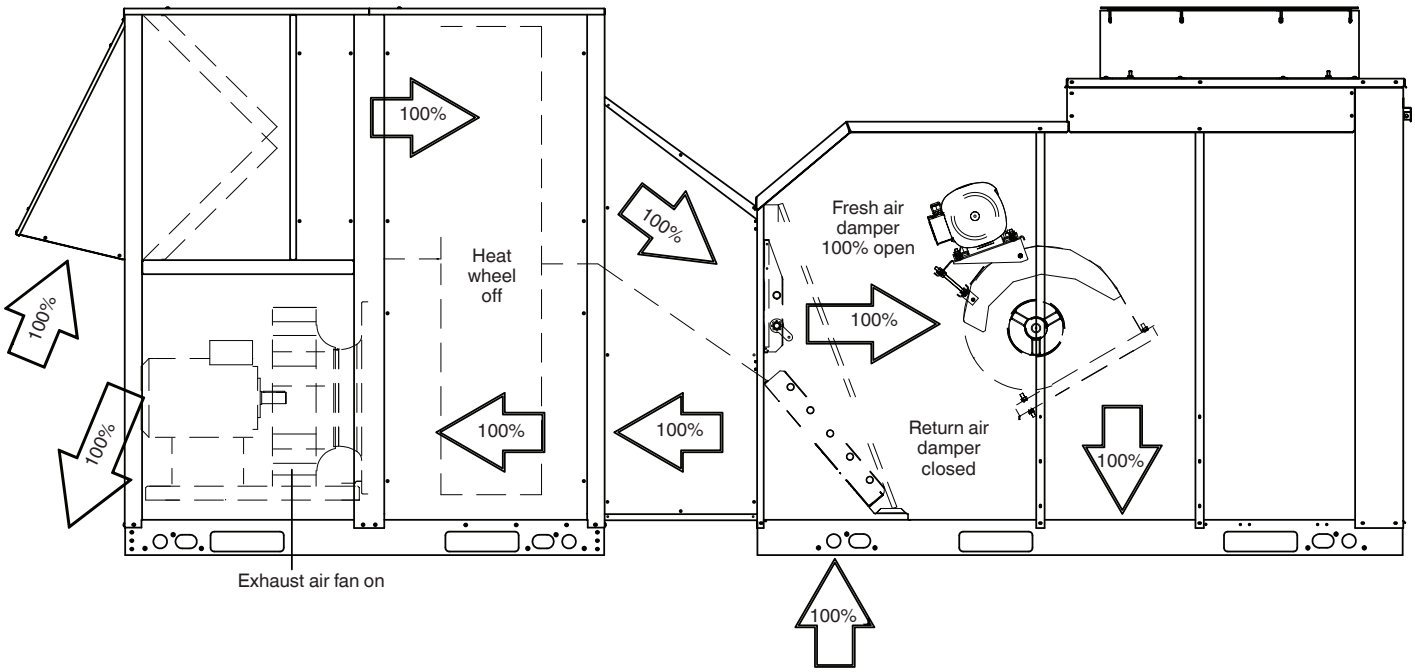

Cooling capacities, energy recovery module (ERM)

ERM 13		IAT, °C	Outdoor air dry bulb temperature, °C																							
			25				30				35				40				43				46			
			Outdoor air relative humidity , %																							
			40				40				40				40				40				40			
Air flow			eff %	CAP	OAT	OAT	eff %	CAP	OAT	OAT	eff %	CAP	OAT	OAT	eff %	CAP	OAT	OAT	eff %	CAP	OAT	OAT	eff %	CAP	OAT	OAT
l/s	m³/h			kW	°C	rh		kW	°C	rh		kW	°C	rh		kW	°C	rh		kW	°C	rh		kW	°C	rh
925	3 330	18	84.7	6.7	19.1	57.4	84.7	11.5	19.8	73.4	84.7	16.3	20.6	92.5	74.5	21.9	23.6	95.0	69.7	26.1	25.6	95.0	66.3	31.3	27.4	95.0
		21	84.8	3.8	21.6	49.1	84.8	8.6	22.4	62.8	84.7	13.4	23.1	79.4	82.0	18.5	24.4	95.0	75.1	22.0	26.5	95.0	70.0	26.2	28.5	95.0
		24	84.9	1.0	24.2	42.1	84.9	5.7	24.9	53.9	84.8	10.5	25.7	68.3	84.7	15.4	26.4	85.5	83.2	18.5	27.2	95.0	75.9	22.0	29.3	95.0
		27	-	-	-	-	85.0	2.9	27.4	46.4	84.9	7.7	28.2	58.8	84.8	12.5	29.0	73.8	84.8	15.4	29.4	84.1	84.4	18.6	30.0	95.0
		30	-	-	-	-	-	-	-	-	85.1	4.8	30.7	50.8	85.0	9.6	31.5	63.8	84.9	12.5	32.0	72.8	84.8	15.5	32.4	82.8
1 378	4 960	18	79.5	9.3	19.4	56.1	79.5	16	20.5	70.6	79.5	22.9	21.5	87.6	73.1	30.6	23.9	95.0	68.3	36.5	25.9	95.0	64.9	43.9	27.8	95.0
		21	79.6	5.3	21.8	48.5	79.6	12	22.8	61.0	79.6	18.8	23.9	76.0	79.5	25.8	24.9	93.4	73.8	30.7	26.8	95.0	68.8	36.7	28.8	95.0
		24	79.7	1.3	24.2	42.0	79.7	8.0	25.2	52.9	79.7	14.8	26.2	66.0	79.6	21.5	27.3	81.5	79.5	25.9	27.9	91.8	74.7	30.8	29.6	95.0
		27	-	-	-	-	79.8	4.0	27.6	46.0	79.8	10.7	28.6	57.4	79.7	17.5	29.6	71.0	79.7	21.6	30.3	80.3	79.6	26.0	30.6	90.2
		30	-	-	-	-	-	-	-	-	79.9	6.7	31.0	50.1	79.8	13.5	32.0	62.0	79.8	17.6	32.6	70.2	79.7	21.7	33.3	79.1
2 067	7 440	18	73.2	12.9	19.9	54.6	73.2	22.1	21.2	67.4	73.2	31.6	22.6	82.1	71.3	42.3	24.3	95.0	66.6	50.4	26.3	95.0	63.2	60.6	28.3	95.0
		21	73.3	7.4	22.1	47.7	73.3	16.6	23.4	59.0	73.3	25.9	24.7	72.1	73.2	35.7	26.1	87.0	72.3	42.4	27.1	95.0	67.3	50.6	29.2	95.0
		24	73.4	1.8	24.3	41.8	73.4	11.1	25.6	51.7	73.4	20.4	26.9	63.4	73.3	29.7	28.3	76.9	73.3	35.8	29.1	85.6	73.2	42.6	29.9	94.8
		27	-	-	-	-	73.5	5.6	27.8	45.4	73.5	14.8	29.1	55.8	73.4	24.2	30.5	67.8	73.4	29.8	31.3	75.8	73.3	35.9	32.1	84.3
		30	-	-	-	-	-	-	-	-	73.6	9.3	31.3	49.2	73.6	18.6	32.6	59.8	73.5	24.3	33.4	67.0	73.4	29.9	34.3	74.8
2 756	9 920	18	68.1	16	20.2	53.4	68.1	27.4	21.8	64.9	68.1	39.2	23.4	77.9	68.0	52.5	25.0	91.9	65.3	62.5	26.7	95.0	61.8	75.1	28.7	95.0
		21	68.2	9.1	22.3	47.1	68.2	20.6	23.9	57.4	68.2	32.1	25.5	69.1	68.1	44.3	27.1	82.2	68.1	52.6	28.0	90.4	66.1	62.8	29.5	95.0
		24	68.3	2.3	24.3	41.7	68.3	13.8	25.9	50.8	68.3	25.3	27.5	61.3	68.2	36.9	29.1	73.3	68.2	44.4	30.0	81.0	68.1	52.8	31.0	89.0
		27	-	-	-	-	68.4	6.9	27.9	45.0	68.4	18.4	29.5	54.5	68.4	30.0	31.1	65.3	68.3	37.0	32.1	72.4	68.3	44.6	33.0	79.9
		30	-	-	-	-	-	-	-	-	68.5	11.5	31.6	48.5	68.5	23.1	33.2	58.2	68.4	30.1	34.1	64.6	68.4	37.2	35.1	71.5
3 444	12 400	18	63.8	18.7	20.5	52.4	63.8	32.1	22.3	62.9	63.8	45.9	24.1	74.6	63.8	61.5	26.0	87.0	63.8	73.3	27.1	94.2	60.8	88.1	29.0	95.0
		21	63.9	10.7	22.4	46.7	63.9	24.1	24.2	56.1	63.9	37.7	26.0	66.7	63.9	51.9	27.9	78.5	63.9	61.7	28.9	85.7	63.8	73.6	30.0	92.8
		24	64	2.7	24.4	41.6	64.0	16.1	26.2	50.0	64	29.6	28.0	59.7	64.0	43.2	29.8	70.5	64.0	52.1	30.8	77.4	63.9	61.9	31.9	84.5
		27	-	-	-	-	64.1	8.1	28.1	44.7	64.2	21.6	29.9	53.4	64.1	35.2	31.7	63.2	64.1	43.4	32.7	69.7	64.0	52.3	33.8	76.4
		30	-	-	-	-	-	-	-	-	64.3	13.5	31.8	47.9	64.2	27.1	33.6	56.8	64.2	35.3	34.7	62.7	64.1	43.6	35.7	68.9
3 472	12 500	18	63.6	18.8	20.5	52.4	63.7	32.3	22.4	62.8	63.7	46.1	24.2	74.5	63.6	61.8	26.0	86.8	63.6	73.7	27.1	94.0	60.7	88.6	29.0	95.0
		21	63.7	10.8	22.5	46.6	63.8	24.3	24.3	56.0	63.8	37.9	26.1	66.6	63.8	52.2	27.9	78.3	63.7	62.1	29.0	85.6	63.7	74.1	30.1	92.6
		24	63.8	2.7	24.4	41.6	63.9	16.2	26.2	50.0	63.9	29.8	28.0	59.6	63.9	43.5	29.8	70.4	63.8	52.4	30.9	77.3	63.8	62.3	32.0	84.3
		27	-	-	-	-	64.0	8.1	28.1	44.7	64	21.7	29.9	53.4	64.0	35.4	31.7	63.2	63.9	43.7	32.8	69.6	63.9	52.6	33.9	76.3
		30	-	-	-	-	-	-	-	-	64.1	13.6	31.8	47.9	64.1	27.3	33.6	56.7	64.0	35.5	34.7	62.6	64.0	43.8	35.8	68.8

eff % Efficiency, %
CAP Cooling capacity, kW
IAT Indoor air temperature, °C
OAT °C ERM outlet air dry-bulb temperature before rooftop unitr inlet, °C
OAT rh ERM outlet air relative humidity before rooftop unitr inlet, %

Cooling capacities, energy recovery module (ERM) (cont.)

ERM 18		IAT, °C	Outdoor air dry bulb temperature, °C																							
			25				30				35				40				43				46			
			Outdoor air relative humidity, %																							
			40				40				40				40				40				40			
Air flow			eff %	CAP	OAT	OAT	eff %	CAP	OAT	OAT	eff %	CAP	OAT	OAT	eff %	CAP	OAT	OAT	eff %	CAP	OAT	OAT	eff %	CAP	OAT	OAT
l/s	m³/h			kW	°C	rh		kW	°C	rh		kW	°C	rh		kW	°C	rh		kW	°C	rh		kW	°C	rh
1 344	4 840	18	84.8	9.7	19.1	57.4	84.7	16.6	19.8	73.4	84.7	23.8	20.6	92.5	74.5	31.8	23.6	95.0	69.8	37.9	25.6	95.0	66.3	45.6	27.4	95.0
		21	84.9	5.5	21.6	49.1	84.8	12.5	22.4	62.8	84.8	19.5	23.1	79.4	82.0	26.8	24.4	95.0	75.1	31.9	26.5	95.0	70.0	38.1	28.5	95.0
		24	84.9	1.4	24.2	42.1	84.9	8.3	24.9	53.9	84.9	15.3	25.7	68.3	84.8	22.4	26.4	85.6	83.2	26.9	27.2	95.0	75.9	32.0	29.3	95.0
		27	-	-	-	-	85.0	4.2	27.4	46.4	85.0	11.2	28.2	58.8	84.9	18.2	29.0	73.8	84.8	22.4	29.4	84.2	84.4	27.0	30.0	95.0
		30	-	-	-	-	-	-	-	-	85.1	7.0	30.7	50.8	85.0	14.0	31.5	63.8	84.9	18.2	32.0	72.8	84.8	22.5	32.4	82.8
2 222	8 000	18	78.0	14.8	19.5	55.8	78.0	25.3	20.6	69.8	78.0	36.2	21.7	86.3	72.7	48.5	24.0	95.0	67.9	57.8	26.0	95.0	64.5	69.4	28.0	95.0
		21	78.1	8.4	21.9	48.3	78.1	19.0	23.0	60.5	78.1	29.7	24.1	75.1	78.0	40.9	25.2	91.8	73.5	48.6	26.8	95.0	68.4	58.0	28.9	95.0
		24	78.2	2.1	24.2	41.9	78.2	12.7	25.3	52.6	78.2	23.3	26.4	65.4	78.1	34.1	27.5	80.4	78.1	41.0	28.2	90.3	74.4	48.8	29.6	95.0
		27	-	-	-	-	78.3	6.4	27.6	45.8	78.3	17.0	28.7	57.0	78.2	27.7	29.8	70.2	78.2	34.2	30.5	79.2	78.1	41.1	31.2	88.8
		30	-	-	-	-	-	-	-	-	78.4	10.6	31.1	49.8	78.4	21.3	32.2	61.5	78.3	27.8	32.8	69.4	78.2	34.3	33.5	78.1
3 333	12 000	18	71.4	20.2	20.0	54.2	71.4	34.8	21.4	66.5	71.4	49.7	22.9	80.6	70.8	66.6	24.4	95.0	66.2	79.3	26.5	95.0	62.7	95.4	28.4	95.0
		21	71.5	11.6	22.1	47.5	71.5	26.1	23.6	58.4	71.5	40.8	25.0	71.1	71.5	56.2	26.4	85.3	71.4	66.8	27.3	94.3	66.9	79.7	29.3	95.0
		24	71.6	2.9	24.3	41.7	71.6	17.5	25.7	51.4	71.6	32.1	27.1	62.7	71.6	46.8	28.5	75.6	71.5	56.4	29.4	84.0	71.5	67.0	30.3	92.7
		27	-	-	-	-	71.8	8.7	27.8	45.3	71.7	23.4	29.3	55.3	71.7	38.1	30.7	66.9	71.6	47.0	31.5	74.6	71.6	56.5	32.4	82.8
		30	-	-	-	-	-	-	-	-	71.9	14.6	31.4	48.9	71.8	29.3	32.8	59.3	71.8	38.2	33.7	66.2	71.7	47.1	34.5	73.6
4 444	16 000	18	66.1	25.0	20.4	53.0	66.2	43.0	22.1	64.0	66.2	61.4	23.8	76.4	66.1	82.3	25.5	89.7	64.8	98.0	26.8	95.0	61.4	117.8	28.8	95.0
		21	66.2	14.3	22.4	46.9	66.3	32.3	24.0	56.8	66.3	50.4	25.7	68.0	66.2	69.4	27.4	80.5	66.2	82.5	28.4	88.3	65.6	90.1	29.6	95.0
		24	66.4	3.6	24.3	41.6	66.4	21.6	26.0	50.4	66.4	39.6	27.7	60.6	66.3	57.8	29.4	72.0	66.3	69.6	30.4	79.4	66.2	82.8	31.4	86.9
		27	-	-	-	-	66.5	10.8	28.0	44.9	66.5	28.9	29.7	54.0	66.5	47.1	31.4	64.3	66.4	58.1	32.4	71.2	66.4	69.9	33.4	78.3
		30	-	-	-	-	-	-	-	-	66.6	18.1	31.7	48.2	66.6	36.3	33.3	57.5	66.5	47.2	34.4	63.7	66.5	58.3	35.4	70.3
5 000	18 000	18	63.9	27.2	20.5	52.5	63.9	46.7	22.3	62.9	63.9	66.7	24.1	74.7	63.9	89.4	25.9	87.1	63.8	106.5	27.0	94.3	60.8	128.0	29.0	95.0
		21	64.0	15.5	22.4	46.7	64.0	35.1	24.2	56.1	64.0	54.7	26.0	66.8	64.0	75.4	27.8	78.5	63.9	89.7	28.9	85.8	63.9	107.0	30.0	92.9
		24	64.1	3.9	24.4	41.6	64.1	23.4	26.2	50.0	64.1	43.1	27.9	59.7	64.1	62.8	29.7	70.6	64.0	75.7	30.8	77.5	64.0	90.0	31.9	84.5
		27	-	-	-	-	64.2	11.7	28.1	44.7	64.2	31.4	29.9	53.4	64.2	51.2	31.7	63.3	64.2	63.1	32.7	69.7	64.1	75.9	33.8	76.4
		30	-	-	-	-	-	-	-	-	64.3	19.6	31.8	47.9	64.3	39.4	33.6	56.8	64.3	51.3	34.6	62.7	64.2	63.3	35.7	68.9

eff % Efficiency, %
CAP Cooling capacity, kW
IAT Indoor air temperature, °C
OAT °C ERM outlet air dry-bulb temperature before rooftop unitr inlet, °C
OAT rh ERM outlet air relative humidity before rooftop unitr inlet, %

Heating capacities, energy recovery module (ERM)

ERM 13		IAT, °C	Outdoor air dry bulb temperature, °C																							
			15				10				5				0				-5				-10			
Air flow			eff %	CAP	OAT	OAT	eff %	CAP	OAT	OAT	eff %	CAP	OAT	OAT	eff %	CAP	OAT	OAT	eff %	CAP	OAT	OAT	eff %	CAP	OAT	OAT
l/s	m³/h			kW	°C	rh		kW	°C	rh		kW	°C	rh		kW	°C	rh		kW	°C	rh		kW	°C	rh
925	3 330	18	84.5	2.9	17.5	76.6	84.5	7.6	16.8	57.9	84.5	12.3	16.0	43.3	84.5	18.2	15.2	35.8	84.4	26.7	14.4	39.5	84.4	33.7	13.6	42.1
		21	84.6	5.7	20.1	65.3	84.6	10.5	19.3	49.3	84.6	15.4	18.5	37.3	84.6	23.0	17.8	35.8	84.5	32.1	17.0	41.0	84.5	39.0	16.2	43.2
		24	84.7	8.6	22.6	55.9	84.7	13.3	21.9	42.2	84.7	18.9	21.1	33.3	84.6	28.5	20.3	36.9	84.6	37.9	19.5	42.2	84.5	44.7	18.7	44.1
		26	84.7	10.5	24.3	50.4	84.7	15.3	23.6	38.2	84.7	21.7	22.8	31.8	84.7	32.6	22.0	37.9	84.7	42.0	21.2	42.9	84.6	48.8	20.5	44.7
1 378	4 960	18	79.2	4.0	17.4	77.3	79.2	10.6	16.3	59.5	79.2	17.2	15.3	45.2	79.2	25.4	14.3	37.8	79.1	37.2	13.2	41.6	79.0	47.1	12.1	44.6
		21	79.3	8.0	19.8	66.6	79.3	14.6	18.7	51.2	79.3	21.4	17.7	39.3	79.3	32.1	16.6	37.8	79.2	44.8	15.6	43.2	79.1	54.4	14.5	45.9
		24	79.4	12.0	22.1	57.5	79.4	18.6	21.1	44.1	79.4	26.3	20.1	35.3	79.4	39.8	19.0	39.0	79.3	52.8	18.0	44.6	79.2	62.4	16.9	47.1
		26	79.5	14.7	23.7	52.2	79.5	21.4	22.7	40.2	79.5	30.2	21.7	33.8	79.4	45.5	20.7	40.0	79.4	58.6	19.6	45.5	79.3	68.0	18.5	47.9
2 067	7 440	18	72.9	5.5	17.2	78.3	72.8	14.6	15.8	61.5	72.8	23.7	14.5	47.7	72.7	35.0	13.1	40.5	72.6	51.3	11.7	44.2	72.6	64.8	10.3	47.7
		21	73.0	11.0	19.4	68.2	72.9	20.1	18.0	53.5	72.9	29.6	16.7	41.9	72.8	44.2	15.3	40.4	72.7	61.7	13.9	46.1	72.7	74.9	12.5	49.4
		24	73.1	16.5	21.6	59.6	73.0	25.7	20.2	46.6	73.0	36.3	18.9	37.9	72.9	54.9	17.5	41.8	72.8	72.8	16.1	47.8	72.8	85.9	14.7	51.0
		26	73.1	20.2	23.0	54.5	73.1	29.5	21.7	42.7	73.1	41.7	20.3	36.4	73.0	62.7	19.0	42.9	72.9	80.7	17.6	48.8	72.8	93.7	16.2	52.0
2 756	9 920	18	67.7	6.8	17.0	79.0	67.7	18.1	15.4	63.1	67.6	29.4	13.8	49.8	67.6	43.4	12.2	42.7	67.5	63.5	10.5	46.5	67.4	80.2	8.9	50.3
		21	67.8	13.6	19.1	69.5	67.8	25.0	17.5	55.4	67.7	36.6	15.8	44.1	67.7	54.7	14.2	42.7	67.6	76.4	12.6	48.5	67.5	92.8	10.9	52.3
		24	67.9	20.5	21.1	61.3	67.9	31.9	19.5	48.8	67.8	45.0	17.9	40.1	67.8	68.0	16.3	44.1	67.7	90.1	14.6	50.4	67.6	106.3	13.0	54.2
		26	68.0	25.1	22.5	56.4	68.0	36.6	20.9	44.9	67.9	51.7	19.3	38.6	67.8	77.7	17.6	45.3	67.8	99.9	16.0	51.6	67.6	116.0	14.4	55.5
3 444	12 400	18	63.5	8.0	16.9	79.7	63.4	21.2	15.1	64.5	63.4	34.4	13.2	51.7	63.3	50.8	11.4	44.7	63.2	74.3	9.5	48.4	63.1	93.8	7.7	52.5
		21	63.6	16.0	18.8	70.7	63.5	29.2	17.0	57.1	63.5	42.9	15.2	46.0	63.4	64.1	13.3	44.7	63.3	98.4	11.5	50.6	63.2	108.5	9.6	54.8
		24	63.7	24.0	20.7	62.7	63.6	37.3	18.9	50.6	63.6	52.7	17.1	42.1	63.5	79.6	15.2	46.1	63.4	105.5	13.4	52.7	63.3	124.4	11.5	57.0
		26	63.7	29.4	22.0	58.0	63.7	42.9	20.2	46.9	63.6	60.5	18.4	40.6	63.6	90.9	16.5	47.3	63.5	117.0	14.7	54.1	63.3	135.7	12.8	58.5
3 472	12 500	18	63.3	8.0	16.9	79.7	63.3	21.3	15.1	64.5	63.2	34.6	13.2	51.7	63.1	51.1	11.4	44.7	63.0	74.7	9.5	48.5	62.9	94.4	7.6	52.6
		21	63.4	16.1	18.8	70.7	63.4	29.4	17.0	57.1	63.3	43.1	15.1	46.1	63.2	64.4	13.3	44.8	63.1	89.9	11.4	50.7	63.0	109.1	9.5	54.9
		24	63.5	24.2	20.7	62.8	63.5	37.5	18.9	50.7	63.4	53.0	17.0	42.2	63.3	80.0	15.2	46.2	63.2	106.1	13.3	52.8	63.1	125.1	11.5	57.1
		26	63.6	29.6	22.0	58.1	63.5	43.1	20.2	46.9	63.5	60.9	18.3	40.7	63.4	91.5	16.5	47.4	63.3	117.6	14.6	54.2	63.2	136.5	12.7	58.7

Legend
eff % Efficiency, %
IAT Indoor air temperature, °C
CAP kW Heating capacity, kW
OAT °C ERM outlet air dry-bulb temperature before rooftop unitr inlet, °C
OAT rh ERM outlet air relative humidity before rooftop unitr inlet, %

Heating capacities, energy recovery module (ERM) (cont.)

ERM 18		IAT, °C	Outdoor air dry bulb temperature, °C																							
			15				10				5				0				-5				-10			
Air flow			eff %	CAP	OAT	OAT	eff %	CAP	OAT	OAT	eff %	CAP	OAT	OAT	eff %	CAP	OAT	OAT	eff %	CAP	OAT	OAT	eff %	CAP	OAT	OAT
l/s	m³/h			kW	°C	rh		kW	°C	rh		kW	°C	rh		kW	°C	rh		kW	°C	rh		kW	°C	rh
1 344	4 840	18	84.5	4.1	17.5	76.6	84.5	11.0	16.8	57.9	84.5	17.9	16.0	43.3	84.5	26.5	15.2	35.8	84.5	38.8	14.4	39.5	84.4	49.0	13.6	42.1
		21	84.6	8.3	20.1	65.3	84.6	15.2	19.3	49.3	84.6	22.3	18.5	37.3	84.6	33.4	17.8	35.8	84.5	46.6	17.0	41.0	84.5	56.7	16.2	43.2
		24	84.7	12.5	22.6	55.9	84.7	19.4	21.9	42.2	84.7	27.4	21.1	33.3	84.7	41.5	20.3	36.9	84.6	55.0	19.5	42.2	84.6	65.0	18.8	44.1
		26	84.8	15.3	24.3	50.4	84.8	22.3	23.6	38.2	84.8	31.5	22.8	31.8	84.7	47.4	22.0	37.9	84.7	61.0	21.3	42.8	84.6	70.9	20.5	44.7
2 222	8 000	18	77.7	6.3	17.3	77.6	77.7	16.8	16.2	59.9	77.7	27.2	15.1	45.8	77.7	40.2	14.0	38.4	77.6	58.9	12.8	42.2	77.5	74.4	11.7	45.3
		21	77.8	12.6	19.7	67.0	77.8	23.1	18.6	51.7	77.8	33.9	17.4	39.9	77.7	50.7	16.3	38.4	77.7	70.8	15.2	43.9	77.6	86.1	14.1	46.7
		24	77.9	19.0	22.0	58.0	77.9	29.5	20.9	44.7	77.9	41.7	19.8	35.9	77.8	63.0	18.7	39.7	77.8	83.6	17.6	45.4	77.7	98.6	16.4	48.0
		26	78.0	23.2	23.6	52.7	78.0	33.9	22.5	40.8	78.0	47.9	21.4	34.4	77.9	72.0	20.3	40.7	77.9	92.7	19.1	46.2	77.8	107.6	18.0	78.9
3 333	12 000	18	71.1	8.7	17.1	78.5	71.1	23.0	15.7	62.0	71.0	37.4	14.2	48.4	71.0	55.1	12.8	41.2	70.9	80.7	11.3	45.0	70.8	101.9	9.8	48.6
		21	71.2	17.3	19.3	68.7	71.2	31.7	17.8	54.1	71.1	46.5	16.4	42.6	71.0	69.5	14.9	41.2	71.0	97.0	13.5	46.9	70.9	117.9	12.0	50.4
		24	71.3	26.0	21.4	60.1	71.3	40.4	20.0	47.4	71.2	57.2	18.5	38.6	71.2	86.4	17.1	42.5	71.1	114.5	15.6	48.7	71.0	135.1	14.1	52.1
		26	71.4	31.8	22.9	55.1	71.3	46.5	21.4	43.5	71.3	65.6	20.0	37.1	71.2	98.7	18.5	43.7	71.1	127.0	17.1	49.8	71.0	147.4	15.6	53.2
4 444	16 000	18	65.8	10.7	17.0	79.3	65.8	28.4	15.3	63.7	65.7	46.1	13.5	50.7	65.6	68.0	11.8	43.6	65.5	99.5	10.1	47.3	65.4	125.6	8.3	51.3
		21	65.9	21.4	19.0	70.0	65.9	39.1	17.2	56.1	65.8	57.4	15.5	45.0	65.7	85.7	13.8	43.6	65.6	119.6	12.1	49.5	65.5	145.3	10.3	53.4
		24	66.0	32.1	20.9	61.9	66.0	49.9	19.2	49.6	65.9	70.5	17.5	41.0	65.8	106.5	15.8	45.0	65.7	141.2	14.1	51.5	65.6	166.5	12.3	55.5
		26	66.1	39.3	22.3	57.1	66.1	57.4	20.6	45.8	66.0	81.0	18.9	39.5	65.9	121.7	17.1	46.2	65.8	156.6	15.4	52.7	65.7	181.7	13.7	56.9
5 000	18 000	18	63.5	11.6	16.9	79.7	63.5	30.8	15.1	64.5	63.4	50.0	13.2	51.6	63.4	73.8	11.4	44.6	63.3	108.0	9.5	48.4	63.1	136.4	7.7	52.5
		21	63.6	23.2	18.8	70.6	63.6	42.5	17.0	57.0	63.5	62.3	15.2	46.0	63.5	93.1	13.3	44.6	63.4	129.9	11.5	50.6	63.2	157.7	9.6	54.8
		24	63.7	34.9	20.7	62.7	63.7	54.2	18.9	50.6	63.6	76.6	17.1	42.1	63.6	115.7	15.3	46.1	63.5	153.3	13.4	52.7	63.3	180.8	11.5	57.0
		26	63.8	42.7	22.0	58.0	63.8	62.3	20.2	46.8	63.7	88.0	18.4	40.6	63.6	132.2	16.5	47.3	63.5	170.0	14.7	54.0	63.4	197.2	12.8	58.5

Legend
eff % Efficiency, %
IAT Indoor air temperature, °C
CAP kW Heating capacity, kW
OAT °C ERM outlet air dry-bulb temperature before rooftop unitr inlet, °C
OAT rh ERM outlet air relative humidity before rooftop unitr inlet, %

Order No.: 14821-20. 01.2012. Supersedes order No.: New.
Manufacturer reserves the right to change any product specifications without notice.
The cover photo is solely for illustration purposes and is not contractually binding.

Manufactured by: Alarko-Carrier. Gebze. Turkey.
Printed in the European Union.